GENERAL ELECTRICAL NOTES (APPLICABLE TO ALL DRAWINGS)

1. CONTRACTOR SHALL COORDINATE ALL WORK WITH EXISTING, ARCHITECTURAL, STRUCTURAL, MECHANICAL, PLUMBING AND SPECIAL SYSTEMS DRAWINGS.

2. MATERIALS AND WORKMANSHIP SHALL COMPLY WITH THE CONTRACT DOCUMENTS, (INCLUDING BOTH DRAWINGS AND SPECIFICATIONS), INDUSTRY STANDARDS, AND IBC 2015 AND LOCAL AMENDMENTS AND APPLICABLE CODES.

3. THE CONTRACTOR SHALL LOCATE DEVICES AND OUTLETS AT LOCATIONS SHOWN ON THE DRAWINGS AND SHALL COORDINATE EXACT LOCATIONS WITH OWNERS EQUIPMENT AND EXISTING, ARCHITECTURAL DRAWINGS, AND MILLWORK SHOP DRAWINGS.

4. ALL MATERIALS AND EQUIPMENT SHALL BE INSTALLED IN ACCORDANCE WITH MANUFACTURERS' PUBLISHED RECOMMENDATIONS FOR SERVICE INTENDED, AS INTERPRETED BY THE ENGINEER. THE INSTALLATION OF ALL THE MATERIALS AND EQUIPMENT SHALL BE PERFORMED BY EXPERIENCED AND LICENSED PERSONNEL.

5. PROVIDE COMPLETE RACEWAY SYSTEM FOR ALL WIRING UNLESS SPECIFICALLY NOTED OTHERWISE. THIS INCLUDES, BUT IS NOT LIMITED TO:
   A. FEEDER WIRING
   B. BRANCH CIRCUIT WIRING
   C. CONTROL WIRING
   D. FIRE ALARM WIRING
   E. CCTV WIRING
   F. SECURITY SYSTEMS
   G. OTHER AUXILIARY SYSTEMS WIRING.
   H. PUBLIC ADDRESS

   WIRING METHODS
   i) CONCEAL ALL RACEWAYS EXCEPT IN MECHANICAL/ELECTRICAL EQUIPMENT ROOMS WITH MASONRY WALLS. INSTALL RACEWAYS AT LEAST 6 INCHES AWAY FROM ANY HEAT PRODUCING ITEMS.
   ii) PROVIDE ADEQUATE AND STURDY SUPPORT FOR ALL PARTS OF RACEWAY SYSTEMS. INSTALL NYLON PULL CORD IN ALL EMPTY RACEWAYS.

6. THE FOLLOWING SYSTEMS THE CONTRACTOR MAY USE PLENUM/LOW SMOKE CABLES FOR CLASS 1 POWER LIMITED CIRCUITS AND INSTALLED PER WIRING METHODS INDICATED BELOW.

   A. COMMUNICATIONS WIRING
   B. TELEPHONE WIRING
   C. DATA WIRING

   WIRING METHODS.
   i) PROVIDE INDEPENDENT SUPPORT FROM THE BUILDING STRUCTURE FOR EACH WIRING SYSTEMS AT NOT TO EXCEED 36 INCHES OR CLOSER IF REQUIRED IN THE NATIONAL ELECTRICAL CODE (NFPA-70).
   ii) CONCEAL ALL WIRING EXCEPT IN MECHANICAL/ELECTRICAL EQUIPMENT ROOMS.
   iii INSTALL WIRING AT LEAST 36 INCHES AWAY FROM ANY HEAT PRODUCING ITEMS.
   iv) PROVIDE RACEWAYS FOR ALL WIRING RUNS IN INACCESSIBLE WALLS, SHAFTS, OR CEILING SPACES. PROVIDE ADEQUATE AND STURDY SUPPORT FOR ALL PARTS OF RACEWAY SYSTEMS. INSTALL NYLON PULL CORD IN ALL EMPTY RACEWAYS.
   v) COMPLY WITH NATIONAL ELECTRICAL CODE (NFPA-70) REQUIREMENTS.
   vi) RUN WIRING PARALLEL TO BUILDING ARCHITECTURAL AND STRUCTURAL COMPONENTS.

7. CONTRACTOR SHALL TAKE PROPER PRECAUTIONS TO PROTECT ALL EXISTING FACILITIES, UTILITIES, AND PROPERTY. CONTRACTOR SHALL ALSO TAKE PROPER PRECAUTIONS OVER PROPERTY WHICH HE MAY TRANSPORT, HOIST OR MOVE MATERIAL, EQUIPMENT, AND DEBRIS AND SHALL REPAIR TO ARCHITECT'S SATISFACTION ALL DAMAGES CAUSED DURING CONSTRUCTION. THE CONTRACTOR SHALL COORDINATE AND NOTIFY THE BUILDING OWNER FOR APPROVAL AND SCHEDULING OF ANY BUILDING SYSTEM INTERRUPTION.

8. ALL EQUIPMENT SHALL BE INSTALLED IN ACCORDANCE WITH MANUFACTURER'S PUBLISHED RECOMMENDATIONS FOR SERVICE INTENDED AS INTERPRETED BY THE ENGINEER. THE INSTALLATION OF ALL EQUIPMENT SHALL BE MADE BY EXPERIENCED CRAFTSMAN IN A NEAT WORKMANLIKE MANNER. ALL MATERIALS, TOOLS, COSTS AND SERVICES NECESSARY TO COMPLETELY INSTALL ALL ELECTRICAL WORK SHALL BE FURNISHED BY THE CONTRACTOR.

9. CIRCUIT BREAKERS FOR INSTALLATION IN EXISTING PANELBOARDS SHALL BE BY THE MANUFACTURER OF THAT PANELBOARD. MATCH THE SHORT CIRCUIT RATING OF THE EXISTING PANEL RATINGS. NEW EQUIPMENT FOR DISTRIBUTION SHALL MATCH EXISTING EQUIPMENT.

10. ALL OUTAGES OF ELECTRICAL UTILITIES, ELECTRICAL SERVICE TO AREAS, OUTAGES OF FIRE ALARM SYSTEMS, COMMUNICATIONS SYSTEMS, SECURITY SYSTEMS, AND TELEPHONE AND DATA SYSTEMS SHALL BE SCHEDULED WITH AND APPROVED BY THE OWNER PRIOR TO THE OUTAGE.

11. THE TERM "PROVIDE" USED IN THE DRAWINGS AND SPECIFICATIONS IMPLIES THE CONTRACTOR IS TO FURNISH, TRANSPORT, INSTALL, CONNECT, WARRANT AND START-UP, INCLUSIVELY.

12. CIRCUITING SHOWN IS DIAGRAMMATIC ONLY, INDICATING CIRCUIT NUMBERS. CONTRACTOR SHALL EXTEND HOT, NEUTRAL, SWITCH-LEG AND GROUND CONDUCTORS TO ALL ELECTRICAL EQUIPMENT INDICATED TO PROVIDE A FULLY FUNCTIONAL SYSTEM.

13. PROVIDE BRANCH CIRCUIT WIRING FOR ALL POWER AND LIGHTING CIRCUITS. WIRE SIZE SHALL BE A MINIMUM OF #12 THWN COPPER IN 1/2" RIGID, EMT OF METALLIC FLEXIBLE CONDUIT. PROVIDE #10 WIRE FOR ALL CIRCUITS FARTHER THAN 100 FEET. ALL RACEWAYS SHALL CONTAIN A GREEN INSULATED GROUND WIRE SIZED PER N.E.C. BRANCH CIRCUITS SHALL HAVE FULL SIZE DEDICATED NEUTRALS.

14. PROVIDE LARGER CONDUCTORS AS REQUIRED TO ACCOUNT FOR DERATING OF CONDUCTORS DUE TO TEMPERATURES ABOVE AMBIENT CONDITIONS, PER NOTE 8 OF N.E.C. AMPACITY TABLES AND FOR VOLTAGE DROP.

15. REGARDLESS OF CIRCUITING INDICATED ON THE DRAWINGS THE CONTRACTOR SHALL BALANCE THE LOADS BETWEEN PHASES ON ALL EXISTING AND NEW PANELBOARDS WITHIN SCOPE OF WORK. UPDATE PANEL DIRECTORIES.

16. PROVIDE ELECTRIC SERVICE REQUIRED BY ALL TRADES INVOLVED IN THE CONSTRUCTION OF THE PROJECT, RECEPTACLES, CORDS, LIGHTS AND LEVELS OF ILLUMINATION SHALL CONFORM TO OSHA, NEC AND LOCAL CODES AND ORDINANCES. PROVIDE TEMPORARY POWER TO THE SITE WHEN REQUIRED.

17. PROVIDE ENGRAVED NAMEPLATES ATTACHED WITH SCREWS ON ALL NEW AND EXISTING PANELS, ENCLOSURES AND EQUIPMENT WITHIN THE SCOPE OF WORK.

18. PROVIDE LOCK-ON HANDLES FOR ALL BREAKERS SERVING EMERGENCY AND EXIT LIGHTS. PROVIDE SWITCHING DUTY BREAKERS FOR ALL UNSWITCHED LIGHTING CIRCUITS.

19. THE TERM "ON" USED IN THE CIRCUITING IMPLIES THE CIRCUIT IS SHARED WITH OTHER DEVICES WITH SAME CIRCUIT NUMBER AND TERM.

20. SPECIAL SYSTEMS CONTRACTORS SHALL MODIFY THE EXISTING SYSTEMS AS REQUIRED TO PROVIDE EXTENSION OF EACH SYSTEM. THE CONTRACTORS SHALL THEREFORE BE RESPONSIBLE AND WARRANT THE PROPER OPERATION OF EACH SYSTEM IN ITS ENTIRETY.

21. INSTALL RECEPTACLES WITH GROUND PRONG FACING UP. LABEL RECEPTACLE AND SWITCH PLATES WITH PANEL AND CIRCUIT NUMBER.

22. PANEL BOARDS SHALL HAVE COPPER BUSING, FULL SIZE NEUTRALS, NEUTRAL BARS, GROUND BARS, PANEL DIRECTORIES, LOCKABLE DOOR-IN-DOOR CONSTRUCTION. PROVIDE NAMEPLATE, VOLTAGE AND ARC FLASH LABELS PER N.E.C.

ELECTRICAL LEGEND

LIGHTING

LETTER ADJACENT TO LIGHT FIXTURE DESIGNATES LIGHT FIXTURE TYPE. REFER TO LIGHT FIXTURE SCHEDULE FOR TYPE AND SPECIFICATIONS. NOT ALL LIGHT FIXTURES SHOWN ON THE DRAWINGS MAY BE INDICATED IN THIS LEGEND. FINAL LOCATION OF ALL LIGHT FIXTURES SHALL BE COORDINATED WITH ARCHITECTURAL DRAWINGS PRIOR TO ROUGH-IN. ALL LIGHT FIXTURES SHALL BE INSTALLED WITH FIXTURE WHIPS AND J-BOXES AS REQUIRED.

SYMBOL	DESCRIPTION AND/OR COMMENTS
A OR A	CEILING OR WALL MOUNTED LIGHT FIXTURE RESPECTIVELY.
A OR A	CEILING OR WALL MOUNTED LIGHT FIXTURE RESPECTIVELY.
A OR A	ROUND OR SQUARE RECESSED DOWNLIGHT RESPECTIVELY.
A OR A	SURFACE MOUNTED OR SUSPENDED LIGHT FIXTURE WITH FLEX CONNECTION TO J-BOX. LETTER DENOTES FIXTURE TYPE. REFER TO FIXTURE SCHEDULE FOR MOUNTING.
A OR A	RECESSED MOUNTED LIGHT FIXTURE WITH FLEX CONNECTION TO J-BOX. LETTER DENOTES FIXTURE TYPE.
AE OR AE	HATCHING OF LIGHT FIXTURE AND/OR "E" AS A LAST LETTER INDICATES FIXTURE WITH EMERGENCY BATTERY PACK.
A	SURFACE MOUNTED LIGHT STRIP.
EM OR EM	WALL MOUNTED EMERGENCY LIGHT FIXTURE WITH INTEGRAL EMERGENCY BATTERY PACK. CONNECT TO NEAREST UNSWITCHED LIGHTING CIRCUIT.
WALL OR CEILING	CEILING OR WALL MOUNTED EXIT LIGHT OR COMBO EXIT/EMERGENCY LIGHT WITH CHEVRONS AND FACES AS INDICATED. REFER TO LIGHT FIXTURE SCHEDULE FOR TYPE.

FINAL LOCATION OF ALL DEVICES AND EQUIPMENT SHALL BE COORDINATED WITH ARCHITECTURAL DRAWINGS PRIOR TO ROUGH-IN. ELECTRICAL EQUIPMENT SHALL BE INSTALLED WITH ADEQUATE WORKING CLEARANCES REQUIRED PER NFPA 70 (NEC).

EQUIPMENT AND DEVICES

SYMBOL	DESCRIPTION AND/OR COMMENTS
FLOOR / WALL / CEILING	J-BOX SIZED AS REQUIRED PER NEC.
OR	PUSHBUTTON. MOUNT AT 48" AFF TO TOP OF DEVICE.
30/2P	HEAVY DUTY DISCONNECT SWITCH, 30/2P DENOTES 30A., 2 POLE
	120/208V-3ø-4W PANEL BOARD. REFER TO PANEL SCHEDULES.
	277/480V 3ø-4W PANEL BOARD. REFER TO PANEL SCHEDULES.
	RECESSED MOUNT 120/208V-3ø-4W PANEL BOARD. REFER TO PANEL SCHEDULES.
	RECESSED MOUNT 277/480V 3ø-4W PANEL BOARD. REFER TO PANEL SCHEDULES.
SPD	TRANSIENT VOLTAGE SURGE SUPPRESSOR. MOUNT DEVICE ADJACENT TO PANEL INDICATED.
MTGB OR TGB	TELECOMMUNICATIONS GROUND BUSS BAR. EXTEND AND CONNECT #1/0 AWG IN 1" CONDUIT TO GROUNDING GRID SYSTEM.
T OR	DRY TYPE TRANSFORMER.
WALL MOUNTED: SINGLE / DUPLEX / QUADPLEX; CEILING MOUNTED; FLOOR MOUNTED	CONVENIENCE RECEPTACLE, 125VAC-20A, NEMA 5-20R. MOUNT AT 18" TO CENTER OF DEVICE UNLESS INDICATED OTHERWISE. RECEPTACLE SUBSCRIPT DESIGNATOR: SS-SURGE SUPPRESSION RECEPTACLE IS-SURGE SUPPRESSION RECEPTACLE WITH ISOLATED GROUND. K-RECEPTACLE WITH KEYED COVER PLATE WP-RECEPTACLE WITH WEATHERPROOF WHILE-IN-USE COVER TR-TAMPER RESISTANT RECEPTACLE TV-RECEPTACLE FOR T.V. MONITOR. MOUNT AT 72" UNLESS OTHERWISE NOTED TO CENTER OF DEVICE AND NOT TO INTERFERE WITH T.V BRACKET. VERIFY BRACKET DIMENSIONS AND EXACT LOCATION PRIOR TO ROUGH-IN. IG-ISOLATED GROUND RECEPTACLE. MOUNT AT 18" TO CENTER OF DEVICE UNLESS INDICATED OTHERWISE. XP-EXPLOSION PROOF RECEPTACLE MOUNT AT 18" TO CENTER OF DEVICE UNLESS INDICATED OTHERWISE. CL-CLOCK OUTLET WITH HANGER. • -HOSPITAL GRADE. TL-TWIST LOCKING RECEPTACLE.
	DATA VOICE OUTLET
	DATA OUTLET
	PHONE OUTLET

GENERAL

DETAIL SYMBOL -USED WHEN DETAIL IS SHOWN ON ANOTHER SHEET

1 / E000

- SECTION OR DETAIL IDENTIFICATION LETTER FOR SECTION NUMBER FOR DETAIL
- NUMBER OF SHEET ON WHICH THE CONDITION IS DRAWN

REFER TO — RE: 1/3

EQUIPMENT AND DEVICES

SYMBOL	DESCRIPTION AND/OR COMMENTS
	GROUND-FAULT CIRCUIT INTERRUPTING RECEPTACLE. MOUNT AT 18" TO CENTER OF DEVICE UNLESS INDICATED OTHERWISE. SUBSCRIPT DESIGNATOR: EWC-ELECTRIC WATER COOLER GROUND-FAULT CIRCUIT INTERRUPTING RECEPTACLE. MOUNT BEHIND WATER COOLER IN AN ACCESSIBLE LOCATION TO ALLOW OPERATION OF TEST AND RESET BUTTONS ON RECEPTACLE. WP-GROUND FAULT CIRCUIT INTERRUPTING DUPLEX RECEPTACLE 125VAC - 20A, NEMA 5-20R WITH WHILE-IN-USE COVER. MOUNT AT 18" TO CENTER OF DEVICE UNLESS OTHERWISE NOTED. REFER TO ARCHITECTURAL DRAWING FOR EXACT LOCATION.
S	TOGGLE SWITCH, 120/277V, 20A, UP 48" UNLESS OTHERWISE NOTED. SUBSCRIPT DESIGNATOR: 3-THREE-WAY TOGGLE SWITCH. OC-WALL-MOUNTED OCCUPANCY SENSOR. UP 48". REFER TO CONTROL DIAGRAM. T - FRACTIONAL - HORSEPOWER MANUAL STARTER/DISCONNECT SWITCH WITH MELTING-ALLOY-TYPE THERMAL OVERLOAD 1HP RATED.
	WIRE MOLD NON-METALIC SURFACE RACEWAY SUBSCRIPT DESIGNATOR: A-WIRE MOLD, 5400 TBWH SERIES WITH 5450T AND 5507D DEVICE PLATES AND BRACKETS AND 5410D ENTRANCE END FITTING. MOUNTED AT LOCATIONS AND SPACING AS SHOWN ON POWER AND SPECIAL SYSTEMS PLANS. CONNECT RECEPTACLES TO CIRCUITS AS SHOWN ON POWER DRAWINGS PROVIDE DATA BRACKETS INSERTS WHERE SHOWN ON SPECIAL SYSTEMS DRAWINGS. COORDINATE LOCATION OF DATA DROPS WITH COMMUNICATIONS CONTRACTOR PRIOR TO INSTALLATION. B-WIRE MOLD, 800 BACWH SERIES WITH 2347 AND 5507 DEVICE BOXES AND PLATES AND 810A ENTRANCE END FITTING MOUNTED AT LOCATIONS AND SPACING AS SHOWING ON POWER DRAWINGS. COORDINATE EXACT LOCATIONS WITH GENERAL CONTRACTOR PRIOR TO INSTALLATION.
OC	WALL MOUNTED DUAL TECHNOLOGY OCCUPANCY SENSOR, MOUNT AT 6" BELOW CEILING TO TOP OF DEVICE.
OC	CEILING MOUNTED DUAL TECHNOLOGY OCCUPANCY SENSOR.
RC	LIGHTING ROOM CONTROLLER/POWER PACK, REFER TO LIGHTING CONTROL DIAGRAMS FOR EXACT REQUIREMENTS
R	ROOF MOUNTED GFCI DUPLEX RECEPTACLE, WEATHERPROOF WITH WHILE IN USE COVER.
M	MOTOR WITH HORSEPOWER INDICATED.
J	WALL MOUNTED 4-11/16 X 4-11/16 X 2-1/8 BOX FOR CONNECTION OF POWER CABLING TO MODULAR FURNITURE. PROVIDE MODULAR FURNITURE CONNECTION AND WHIP PER NEC AND FURNITURE MANUFACTURES REQUIREMENTS.
T	T'STAT BY MECHANICAL. ROUGH-IN BY ELECTRICAL. REFER TO T'STAT ROUGH-IN DETAIL.
PB	PULL BOX. SIZE AS REQUIRED.
PP	POWER POLE.
OR M	ELECTRIC METER.
	GROUND PER NEC UNLESS INDICATED OTHERWISE.

RACEWAY AND BRANCH CIRCUITING

SYMBOL	DESCRIPTION AND/OR COMMENTS
LA-1	HOME RUN TO PANEL & CIRCUIT INDICATED. REFER TO PANEL SCHEDULES FOR CONDUIT AND WIRE SIZES UNLESS INDICATED OR NOTED OTHERWISE.
	CONDUIT (SIZE AS NOTED) WITH PULL WIRE STUBBED WHERE INDICATED. PROVIDE BUSHING AT END OF CONDUIT.
	LINE TYPE INDICATES EXISTING TO REMAIN ELECTRICAL, DEVICES, EQUIPMENT, ECT.
	LINE TYPE INDICATES EXISTING TO BE DEMOLISHED ELECTRICAL EQUIPMENT, DEVICES, ETC.
XXX	LINE TYPE INDICATES NEW ELECTRICAL DEVICES, EQUIPMENT, ETC.
	SECOND AND THIRD MODIFIER. DESIGNATES CIRCUIT TYPE. (SEE BELOW) FIRST MODIFIER. "O" DESIGNATES OVERHEAD, "U" DESIGNATES UNDERGROUND, "S" DESIGNATES SURFACE.
OE	OVERHEAD ELECTRICAL.
UE	UNDERGROUND ELECTRICAL.
EUE	EXISTING UNDERGROUND ELECTRICAL.
OT	OVERHEAD TELEPHONE.
UT	UNDERGROUND TELEPHONE.
OME	OVERHEAD MEDIUM VOLTAGE ELECTRICAL (13.8KV).
UME	UNDERGROUND MEDIUM VOLTAGE ELECTRICAL (13.8KV).
OT/D	OVERHEAD TELEPHONE/DATA.
UT/D	UNDERGROUND TELEPHONE/DATA.

REV.	DATE	BY	DESCRIPTION

DESIGNED ES
DRAWN CAD
CHECKED JG
DATE 01/15/20

"This preliminary drawing is released for the purpose of owner review under the authority of Javier Garcia, P.E., New Mexico Professional Engineer Number 14969 on January 26, 2021. This drawing is not to be used for construction, bidding, or permitting purposes. Alterations of this document is an offense under the New Mexico Engineering Practice Act."

Bath ENGINEERING
TEXAS FIRM REGISTRATION NO. 829
4110 RIO BRAVO SUITE 102
EL PASO, TX 79902
TEL: 915-313-7200

ELECTRICAL LEGEND AND GENERAL NOTES

NEW MEXICO TECH WEST HALL

JOB NO. 3619
DRAWING NO. E0.0

KEYED NOTES

1. COORDINATE WITH NEW MEXICO TECH ON ROUTING AND PRIMARY SIZE REQUIREMENTS.
2. REFER TO ELECTRICAL RISER DIAGRAMS ON SHEET E4.0 FOR ADDITIONAL INFORMATION OF CONCRETE ENCASED SECONDARY CONDUCTORS AND CONDUITS.
3. NEW OWNER PROVIDED 300KVA SERVICE TRANSFORMER TO SERVE NEW SWITCHBOARD "MSB" IN WEST HALL. CONTRACTOR SHALL COORDINATE WITH OWNER EXACT LOCATION AND WORK REQUIRED.
4. NEW 3ø, NEMA 3R, FUSED SERVICE DISCONNECT. PENETRATE CONDUIT AT A HEIGHT ABOVE THE FIRST FLOOR CEILING GRID IN NEAREST ACCESSIBLE LOCATION TO ALLOW CONDUIT TO BE CONCEALED IN CEILING SPACE THROUGHOUT.
5. NEW SERVICE METER SHALL BE E-MON D-MON, 3P, 4W, WYE, 120/208V. CONTRACTOR SHALL PROVIDE CT'S FULLY RATED OF TRANSFORMER LOAD AND SHALL BE INSTALLED INSIDE SERVICE DISCONNECT.

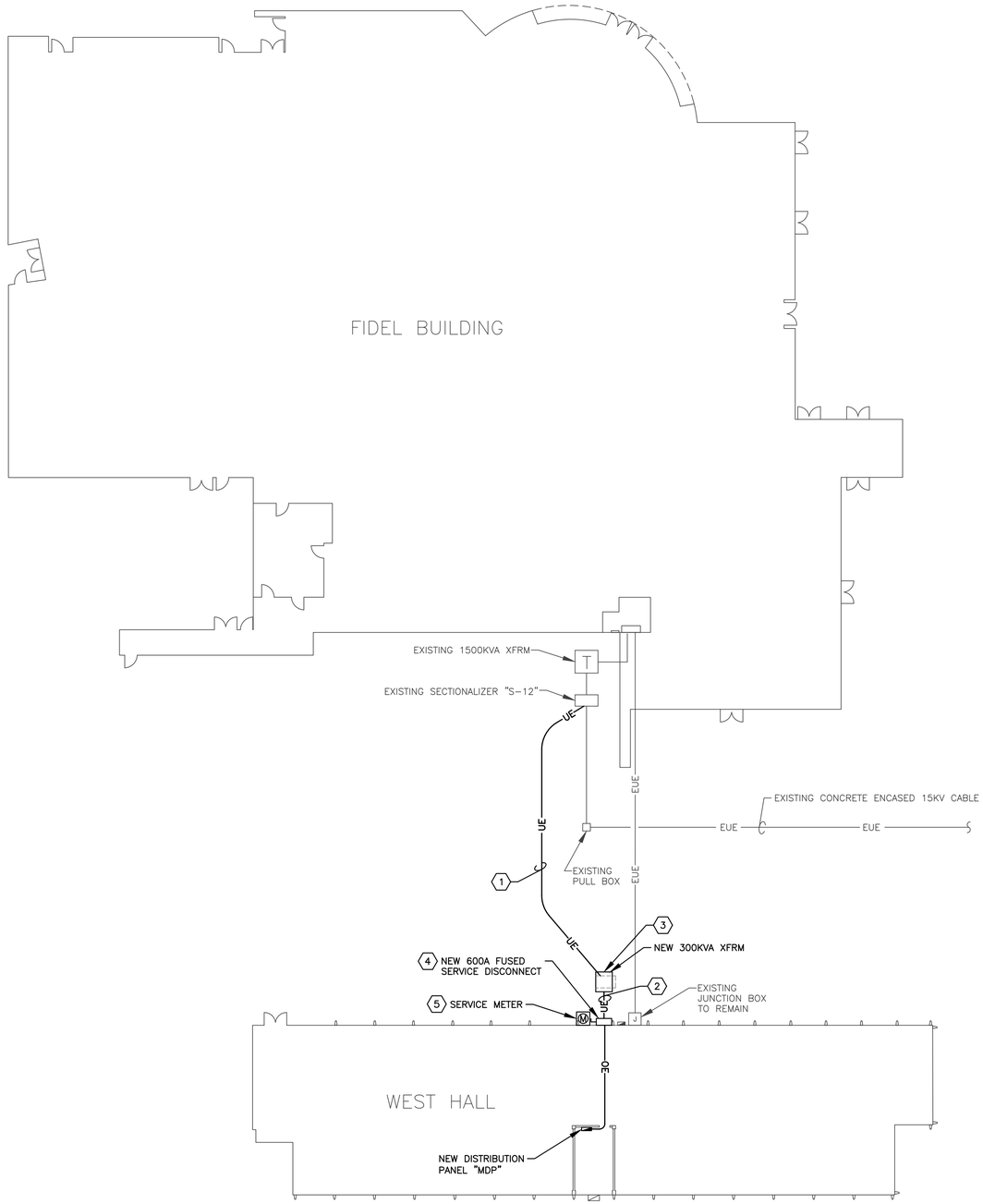

N

1 E1.0 ELECTRICAL SITE PLAN - REVISED

0 4' 8' 16'

SCALE: 1"=20'-0"

REV.	DATE	BY	DESCRIPTION

DESIGNED ES
DRAWN CAD
CHECKED JG
DATE 01/15/20

"This preliminary drawing is released for the purpose of owner review under the authority of Javier Garcia, P.E., New Mexico Professional Engineer Number 14969 on January 26, 2021. This drawing is not to be used for construction, bidding, or permitting purposes. Alterations of this document is an offense under the New Mexico Engineering Practice Act."

Bath ENGINEERING
TEXAS FIRM REGISTRATION NO. 829
4110 RIO BRAVO SUITE 102
EL PASO, TX 79902
TEL: 915-313-7200

ELECTRICAL SITE PLAN - REVISED

NEW MEXICO TECH WEST HALL

JOB NO. 3619
DRAWING NO. E1.0

GENERAL NOTES

1. CONTRACTOR SHALL REMOVE ASSOCIATED CONDUIT AND WIRING BACK TO SOURCE FROM MECHANICAL EQUIPMENT BEING DEMOLISHED.

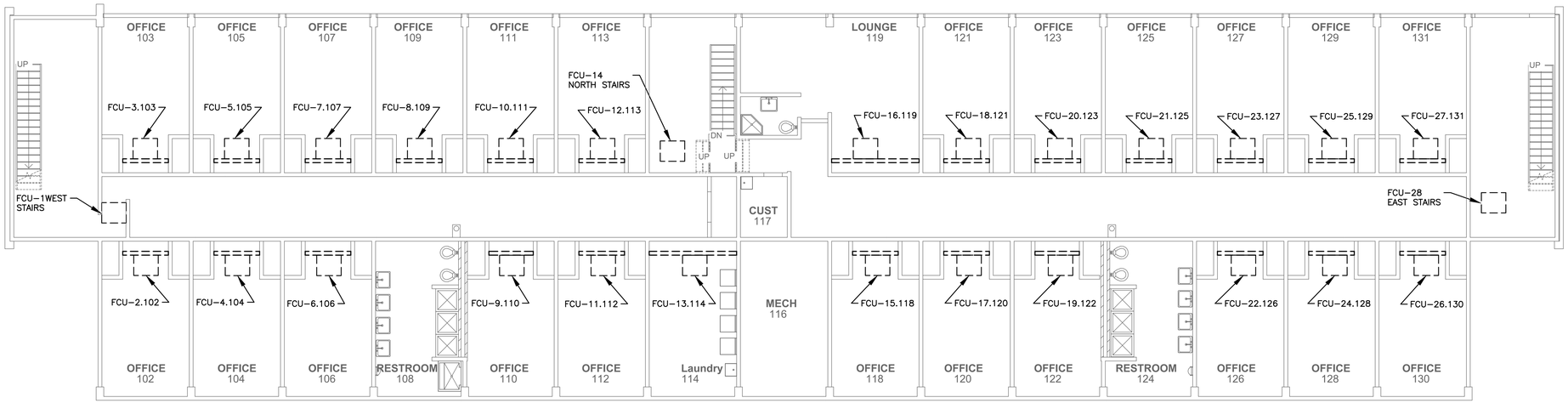

1 E2.2 FIRST FLOOR HVAC POWER PLAN - DEMOLITION

0 4' 8' 16'

SCALE: 1/8"=1'-0"

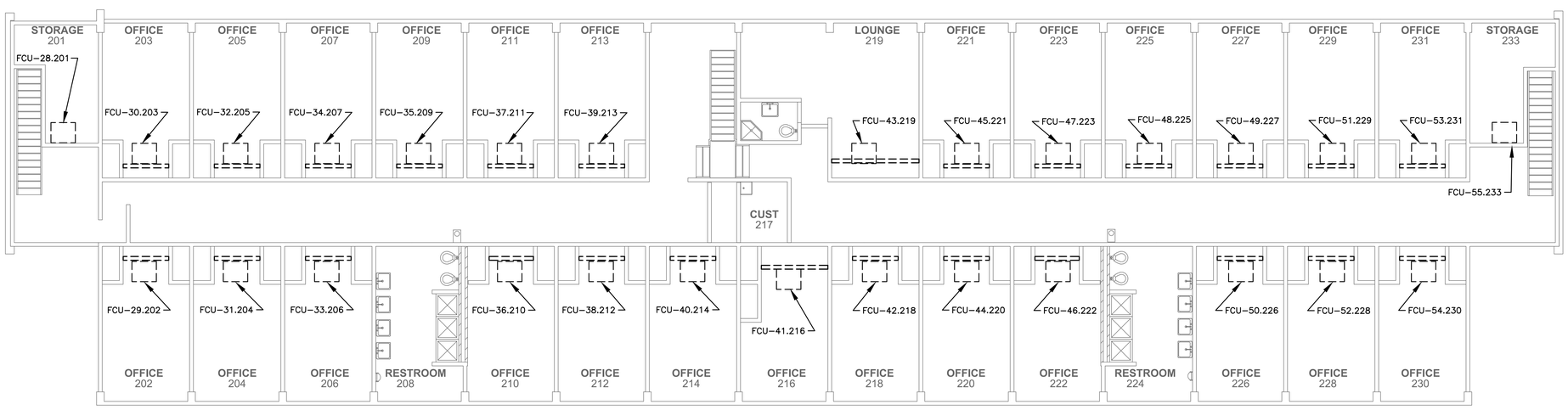

2 E2.2 SECOND FLOOR HVAC POWER PLAN - DEMOLITION

0 4' 8' 16'

SCALE: 1/8"=1'-0"

REV.	DATE	BY	DESCRIPTION

DESIGNED ES
DRAWN CAD
CHECKED JG
DATE 01/15/20

"This preliminary drawing is released for the purpose of owner review under the authority of Javier Garcia, P.E., New Mexico Professional Engineer Number 14969 on January 26, 2021. This drawing is not to be used for construction, bidding, or permitting purposes. Alteration of this document is an offense under the New Mexico Engineering Practice Act."

Bath ENGINEERING
TEXAS FIRM REGISTRATION NO. 829
4110 RIO BRAVO SUITE 102
EL PASO, TX 79902
TEL: 915-313-7200

1ST AND 2ND FLOOR HVAC POWER PLANS - DEMOLITION

NEW MEXICO TECH WEST HALL

JOB NO. 3619

DRAWING NO. E2.2

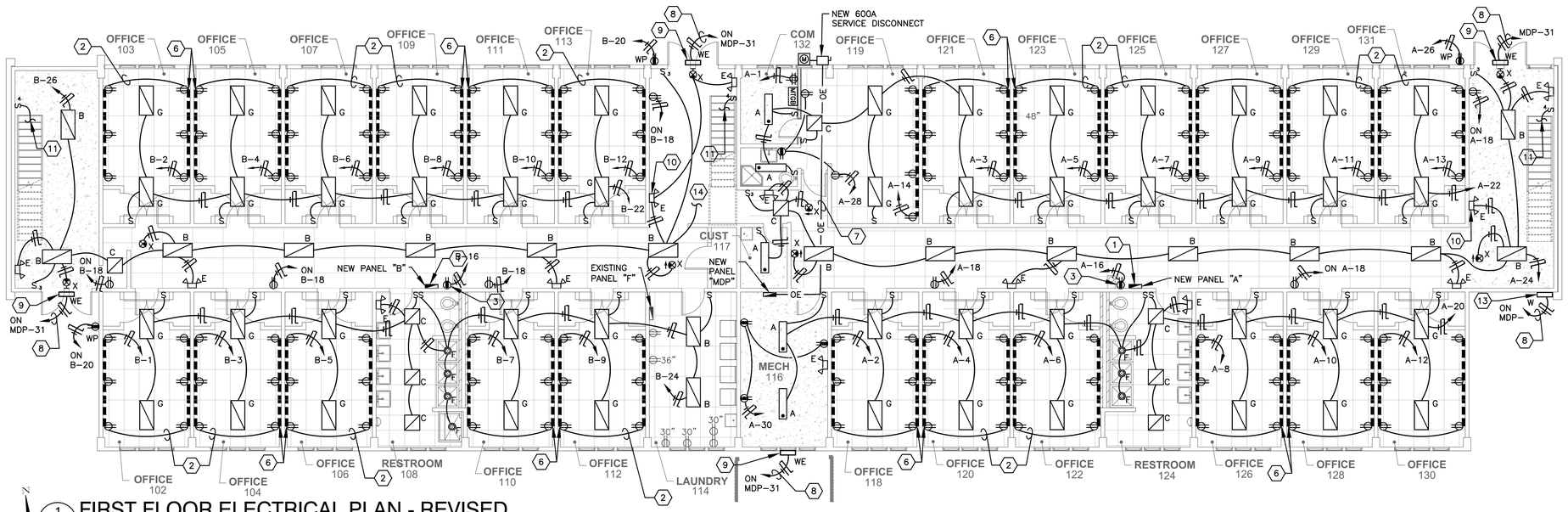

1 FIRST FLOOR ELECTRICAL PLAN - REVISED

E3.1

0 4' 8' 16'

SCALE: 1/8"=1'-0"

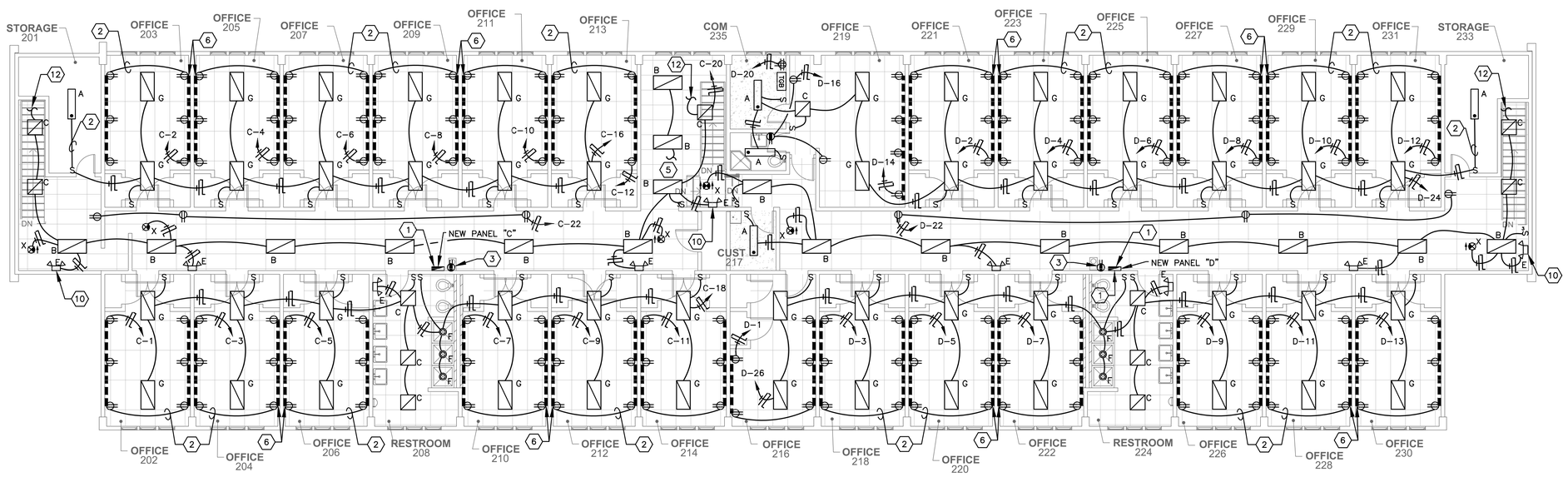

2 SECOND FLOOR ELECTRICAL PLAN - REVISED

E3.1

0 4' 8' 16'

SCALE: 1/8"=1'-0"

GENERAL NOTES

1. REFER TO ELECTRICAL SYMBOL LEGEND AND ELECTRICAL GENERAL NOTES FOR ADDITIONAL INFORMATION.
2. NEW LIGHTING FIXTURES TO BE INSTALLED IN SAME LOCATION AS DEMOLISHED FIXTURE UNLESS NOTED OTHERWISE. REFER TO LIGHT FIXTURE SCHEDULE FOR FIXTURE TYPE.
3. UNDER AN ALTERNATE THE CONTRACTOR SHALL REMOVE AND REPLACE ALL WALL SWITCHES IN OFFICES WITH LINE VOLTAGE, DUAL TECHNOLOGY OCCUPANCY SENSOR SWITCH.

KEYED NOTES

1. NEW PANEL BOARD SHALL BE SURFACE MOUNTED IN THE SAME LOCATION AS THE PREVIOUS PANEL BOARD. CONTRACTOR SHALL MODIFY DEMOLISHED PANEL BOARD OPENING AS NECESSARY FOR A FLUSH MOUNTING. EXPOSED CONDUITS SHALL BE PAINTED TO MATCH ADJACENT SURFACE. REFER TO PANEL SCHEDULES FOR ADDITIONAL INFORMATION.
2. PROVIDE 700 SERIES RACEWAY THROUGHOUT OFFICE SPACE.
3. PROVIDE GFCI TYPE RECEPTACLE FOR EXISTING EWC.
4. NEW DISTRIBUTION PANEL "MDP", 120/208V, 3ø, 4 WIRE. REFER TO PANEL SCHEDULE FOR ADDITIONAL INFORMATION.
5. EXTEND TO LIGHT FIXTURE ON FIRST FLOOR. REFER TO KEYED NOTE 14 ON THIS SHEET FOR CONTINUATION.
6. PROVIDE 5400 SERIES MULTI COMPARTMENT NONMETALLIC WIREMOLD AT 18" A.F.F. WIREMOLD SHALL RUN THE LENGTH SHOWN WITH NUMBER OF RECEPTACLES SHOWN. SPARE COMPARTMENT FOR OWNER PROVIDED AND INSTALLED DATA DEVICES. CONTRACTOR SHALL PROVIDE SPARE DEVICE BRACKETS WITH BLANK FACEPLATES TO MATCH NUMBER OF RECEPTACLES FOR FUTURE OWNER PROVIDED AND INSTALLED DATA DEVICES. PROVIDE (2) 3/4" CONDUITS UP TO NEAREST ACCESSIBLE CEILING FOR POWER AND COMMUNICATIONS. CONTRACTOR SHALL PROPERLY SUPPORT CONDUITS TO WALL AND PAINT TO MATCH ADJACENT SURFACE. REFER TO TYPICAL WIREMOLD INSTALLATION DETAIL 7 ON SHEET E4.0.(TYPICAL)
7. APPROXIMATE ROUTING OF NEW OVERHEAD LINES. REFER TO ELECTRICAL RISER DIAGRAM FOR SIZE AND NUMBER OF CONDUITS AND WIRES.
8. EXTEND THROUGH EXISTING OUTSIDE LIGHTING CONTACTOR.
9. MOUNT 12" ABOVE FINISH FLOOR ABOVE DOOR/WINDOW FRAME. FIELD COORDINATE EXACT MOUNTING HEIGHT WITH OWNER PRIOR TO ROUGH-IN.
10. MOUNT EMERGENCY LIGHTS "E" 6" BELOW CEILING GRID/CEILING STRUCTURE.(TYPICAL)
11. EXTEND AND CONNECT TO RESPECTIVE CIRCUIT CONNECTED TO SECOND FLOOR LIGHTING.
12. EXTEND AND CONNECT TO RESPECTIVE CIRCUIT CONNECTED TO FIRST FLOOR SWITCH.
13. MOUNT FIXTURE AT PREVIOUS FLOOD LIGHT LOCATION. CONTRACTOR SHALL PROVIDE NEW WIRES BACK TO SOURCE TO AVOID SPLICING.
14. EXTEND TO LIGHT FIXTURE ON SECOND FLOOR. REFER TO KEYED NOTE 5 ON THIS SHEET FOR CONTINUATION.

REV.	DATE	BY	DESCRIPTION

DESIGNED ES
DRAWN CAD
CHECKED JG
DATE 01/15/20

"This preliminary drawing is released for the purpose of owner review under the authority of Javier Garcia, P.E., New Mexico Professional Engineer Number 14969 on January 26, 2021. This drawing is not to be used for construction, bidding, or permitting purposes. Alterations of this document is an offense under the New Mexico Engineering Practice Act."

Bath ENGINEERING
TEXAS FIRM REGISTRATION NO. 829
4110 RIO BRAVO SUITE 102
EL PASO, TX 79902
TEL: 915-313-7200

1ST AND 2ND FLOOR
ELECTRICAL PLANS - REVISED

NEW MEXICO TECH WEST HALL

JOB NO. 3619
DRAWING NO. E3.1

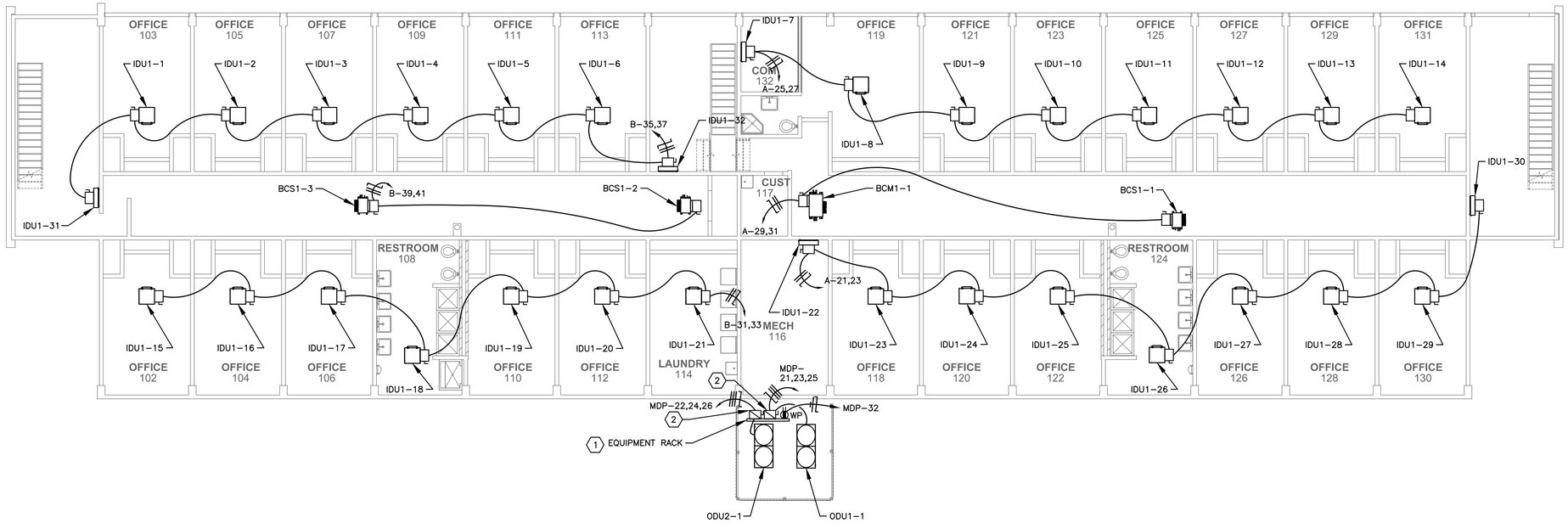

1 FIRST FLOOR HVAC POWER PLAN - REVISED

E3.2

0 4' 8' 16'

SCALE: 1/8"=1'-0"

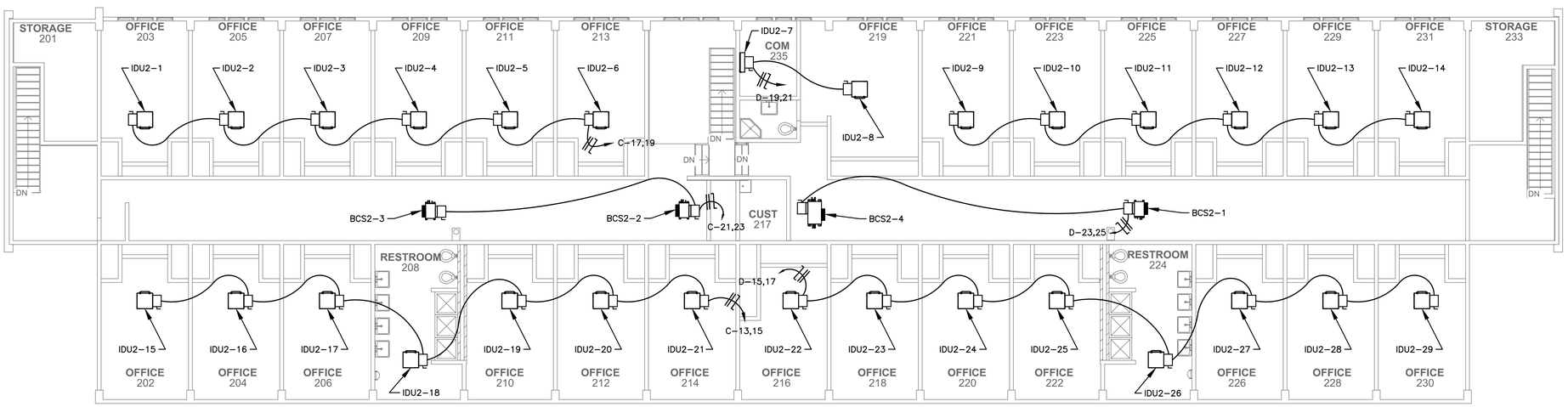

2 SECOND FLOOR HVAC POWER PLAN - REVISED

E3.2

0 4' 8' 16'

SCALE: 1/8"=1'-0"

GENERAL NOTES

1. REFER TO ELECTRICAL SYMBOL LEGEND AND ELECTRICAL GENERAL NOTES FOR ADDITIONAL INFORMATION.
2. FIELD COORDINATE WITH MECHANICAL CONTRACTOR ON MECHANICAL EQUIPMENT CONTROLS AND T-STAT ROUGH-IN REQUIREMENTS. REFER TO MECHANICAL DRAWINGS FOR NEW T-STAT LOCATIONS.

KEYED NOTES

1. PROVIDE EQUIPMENT RACK TO MOUNT ASSOCIATED FUSED DISCONNECTS TO SERVE ODU1-1 AND ODU2-1 AND GFCI RECEPTACLE. REFER TO EQUIPMENT RACK DETAIL ON THIS SHEET E4.0 FOR REQUIREMENTS. FIELD COORDINATE WITH OWNER ON EXACT LOCATION TO PLACE EQUIPMENT RACK PRIOR TO ROUGH-IN.
2. 100A, 3 POLE, NEMA 3R FUSED DISCONNECT, FUSED AT 70A MOUNT ON EQUIPMENT RACK. LABEL DISCONNECT TO MATCH ASSOCIATED MECHANICAL EQUIPMENT.

REV.	DATE	BY	DESCRIPTION

DESIGNED ES
DRAWN CAD
CHECKED JG
DATE 01/15/20

"This preliminary drawing is released for the purpose of owner review under the authority of Javier Garcia, P.E., New Mexico Professional Engineer Number 14969 on January 26, 2021. This drawing is not to be used for construction, bidding, or permitting purposes. Alteration of this document is an offense under the New Mexico Engineering Practice Act."

Bath ENGINEERING
TEXAS FIRM REGISTRATION NO. 829
4110 RIO BRAVO SUITE 102
EL PASO, TX 79902
TEL: 915-313-7200

1ST AND 2ND FLOOR HVAC POWER PLANS - REVISED

NEW MEXICO TECH WEST HALL

JOB NO. 3619
DRAWING NO. E3.2

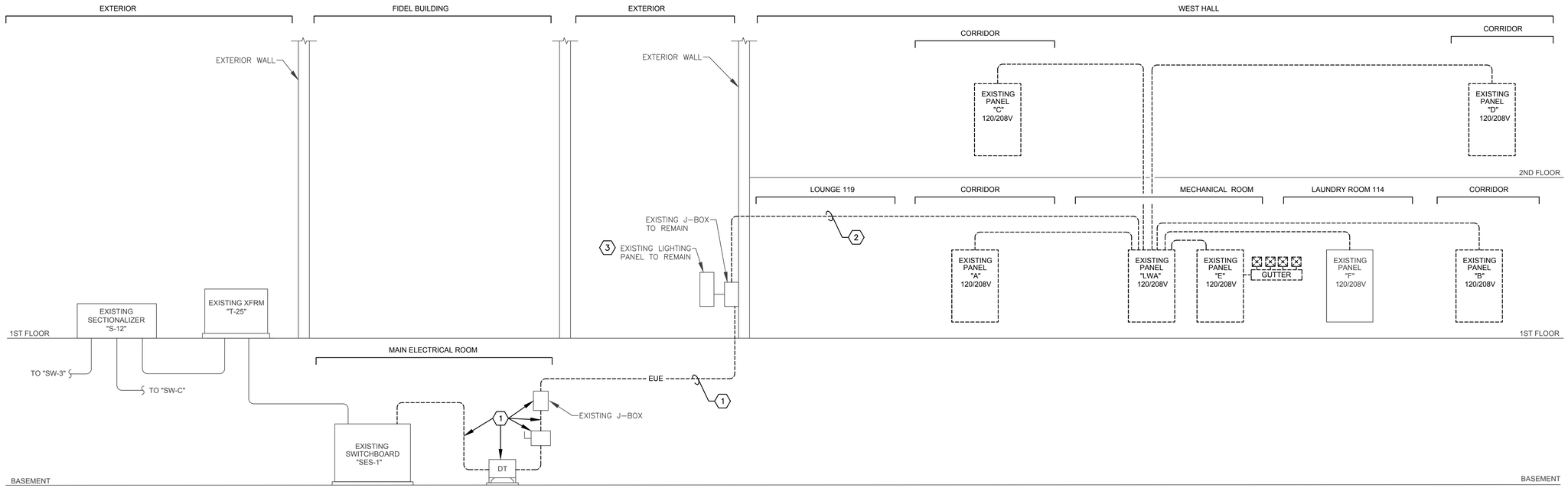

1 ELECTRICAL RISER DIAGRAM - DEMOLITION

E4.0

SCALE: NTS

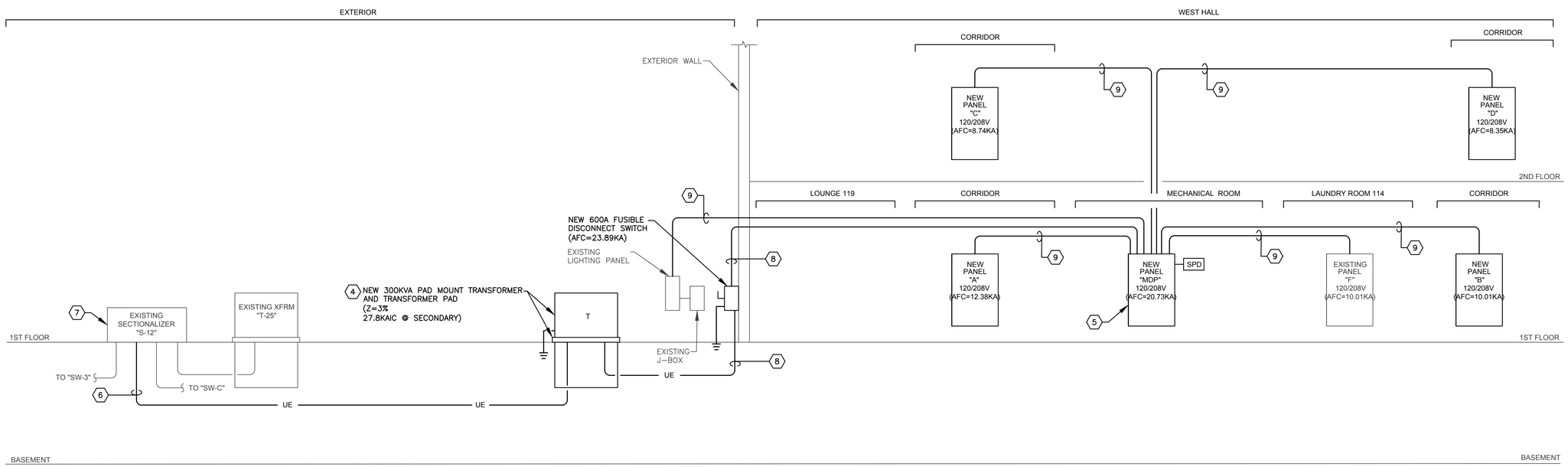

2 ELECTRICAL RISER DIAGRAM - REVISED

E4.0

SCALE: NTS

GENERAL NOTES

1. REFER TO ELECTRICAL LEGEND AND ELECTRICAL GENERAL NOTES FOR ADDITIONAL INFORMATION.
2. ELECTRICAL CONTRACTOR SHALL PROVIDE SHORT CIRCUIT COORDINATION AND ARCH FLASH STUDY.

KEYED NOTES

1. CONTRACTOR SHALL DISCONNECT AND REMOVE WIRING FROM EXISTING SWITCHBOARD "SES-1" TO EXISTING J-BOX, LOCATED AT THE EXTERIOR OF WEST HALL. ALL EXPOSED CONDUITS AND UNDERGROUND CONDUITS SHALL BE CAPPED AND ABANDONED IN PLACE. EXISTING DISCONNECT SWITCH, DRY TYPE TRANSFORMER AND J-BOX SHALL BE SALVAGED BACK TO OWNER. COORDINATE WITH NEW MEXICO TECH PRIOR TO COMMENCING WORK.
2. CONTRACTOR SHALL REMOVE FURR-OUT IN LOUNGE 119 AND REMOVE ALL CONDUITS AND WIRING UP TO PANEL "LWA". REFER TO SHEET ED1.01 FOR ADDITIONAL INFORMATION.
3. EXISTING LIGHTING PANEL TO REMAIN. REFER TO REVISED RISER DIAGRAM FOR NEW WORK REQUIRED.
4. ALL WORK ASSOCIATED WITH THE SERVICE ENTRANCE SHALL BE COORDINATED AND VERIFIED WITH NEW MEXICO TECH. AND SHALL MEET ALL THEIR STANDARDS AND REQUIREMENTS.
5. NEW 600AMP, 120/208V, 3ø PANEL. REFER TO PANEL SCHEDULES FOR CONDUCTOR SIZE OF PANELS BEING SERVED FROM NEW DISTRIBUTION PANEL "MDP".
6. PROVIDE 15KV, 200AMP LOAD BREAK ELBOW CONNECTORS WITH INTEGRAL JACKET SEAL, #COOPER POWER SERIES, #LE5215 OR EQUAL. ELBOW TYPE AND SIZE SHALL BE PROVIDED IN COORDINATION WITH POWER CABLE TO ACCEPT CABLE INSULATION SIZE.
7. SECTIONALIZER "S-12" IS SHALL BETTER SCSD-3154-22-22-GA-BIX. CONTRACTOR SHALL PROVIDE 15KV LOADBREAK BUSHING INSERT, #COOPER POWER SERIES #LBI215 OR EQUAL IF LOADBREAK BUSHINGS ARE NOT AVAILABLE.
8. (2) SETS OF 3" CONDUITS EACH WITH (4)#350 KCMIL + #1 GROUND.
9. REFER TO PANEL SCHEDULES ON SHEET E6.0 FOR SIZING AND NUMBER OF CONDUIT AND WIRES.

REV.	DATE	BY	DESCRIPTION

DESIGNED ES
DRAWN CAD
CHECKED JG
DATE 01/15/20

"This preliminary drawing is released for the purpose of owner review under the authority of Javier Garcia, P.E., New Mexico Professional Engineer Number 14969 on January 26, 2021. This drawing is not to be used for construction, bidding, or permitting purposes. Alterations of this document is an offense under the New Mexico Engineering Practice Act."

Bath ENGINEERING
TEXAS FIRM REGISTRATION NO. 829
4110 RIO BRAVO SUITE 102
EL PASO, TX 79902
TEL: 915-313-7200

ELECTRICAL RISER DIAGRAMS

NEW MEXICO TECH WEST HALL

JOB NO. 3619
DRAWING NO. E4.0

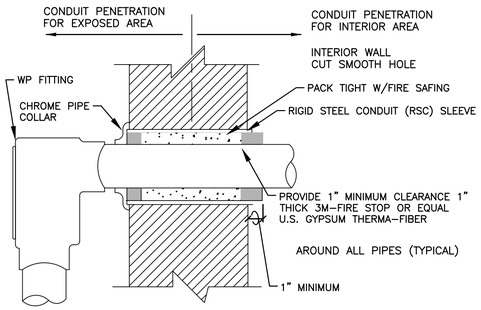

ELECTRICAL SERVICE CONDUIT PENETRATION DETAIL

10 / E5.0 N.T.S.

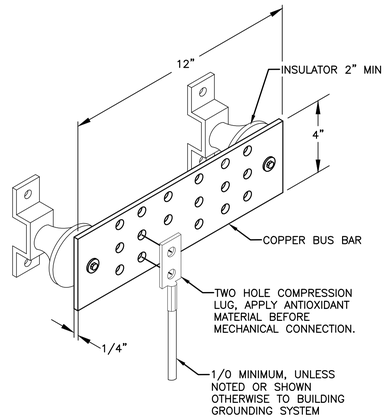

TELECOMMUNICATIONS AND ELECTRICAL GROUNDING BUS BAR

9 / E5.0 N.T.S.

MTGB OR TGB

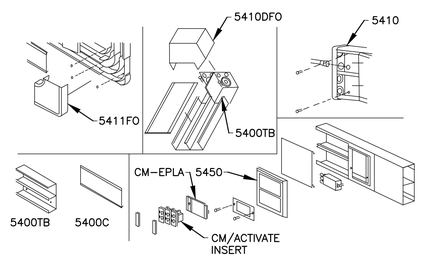

WIREMOLD 5400 RACEWAY COMPONENTS

8 / E5.0 N.T.S.

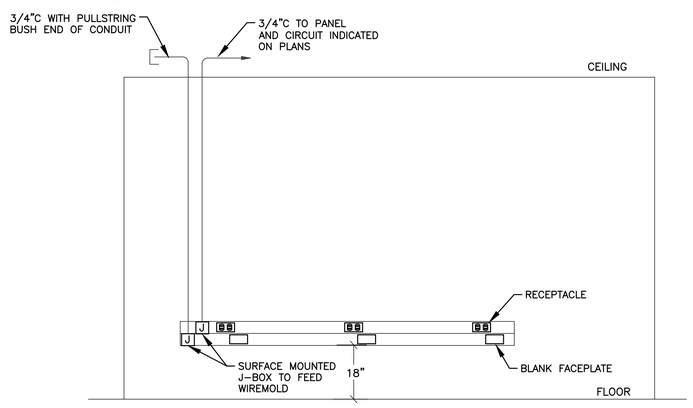

TYPICAL WIREMOLD INSTALLATION DETAIL

7 / E5.0 N.T.S.

KEYED NOTES (THIS SHEET ONLY)

1. SURFACE MOUNTED 27/8" X 4" 5/8" X 1 3/4" DEEP SINGLE GANG RACEWAY DEVICE BOX. FIELD VERIFY EXACT MOUNTING LOCATION PRIOR TO ROUGH-IN. T'STAT/SENSOR BY CONTROLS CONTRACTOR.
2. 700 SERIUS RACEWAY WITH PULLWIRE FULL LENGTH. CONCEALED IN FINISHED AREAS. SURFACE MOUNTED IN UNFINISHED AREAS. EXTEND AND TERMINATE AT MECHANICAL UNIT. CABLES/CONDUCTORS BY MECHANICAL CONTRACTOR.

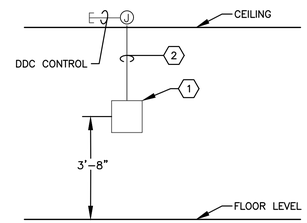

T'STAT/SENSOR ROUGH-IN DETAIL

6 / E5.0 N.T.S.

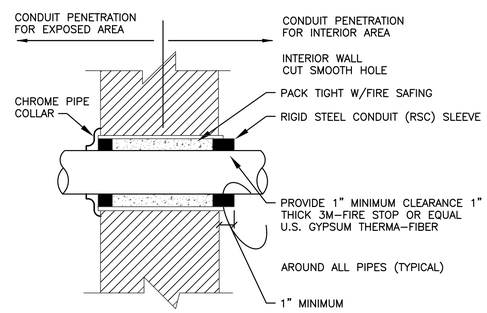

TYPICAL CONDUIT PENETRATION DETAIL

5 / E5.0 N.T.S.

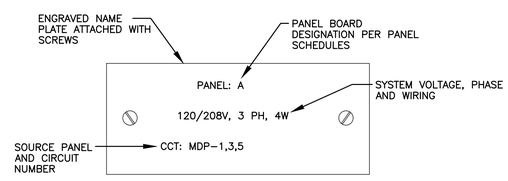

TYPICAL PANELBOARD LABELING DETAIL

4 / E5.0 N.T.S.

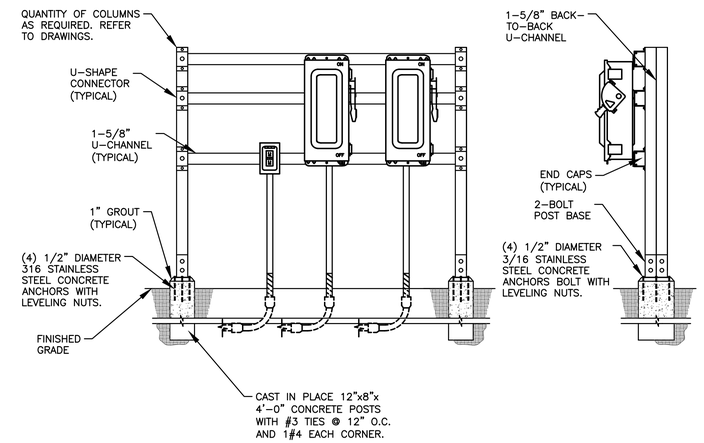

EQUIPMENT RACK DETAIL

3 / E5.0 N.T.S.

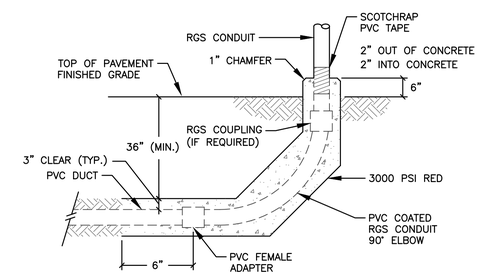

PVC COATED RGS ELBOW TYPICAL CONDUIT STUBUP

2 / E5.0 N.T.S.

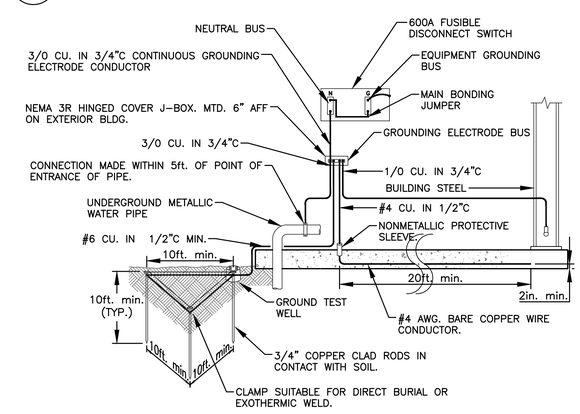

SERVICE ENTRANCE GROUNDING DETAIL

1 / E5.0 N.T.S.

REV.	DATE	BY	DESCRIPTION

DESIGNED ES
DRAWN CAD
CHECKED JG
DATE 01/15/20

"This preliminary drawing is released for the purpose of owner review under the authority of Javier Garcia, P.E., New Mexico Professional Engineer Number 14969 on January 26, 2021. This drawing is not to be used for construction, bidding, or permitting purposes. Alterations of this document is an offense under the New Mexico Engineering Practice Act."

Bath ENGINEERING
TEXAS FIRM REGISTRATION NO. 829
4110 RIO BRAVO SUITE 102
EL PASO, TX 79902
TEL: 915-313-7200

ELECTRICAL DETAILS

NEW MEXICO TECH WEST HALL

JOB NO. 3619
DRAWING NO. E5.0

PANEL MDP

DESCRIPTION	BRANCH CIRCUIT SETS	BRANCH CIRCUIT WIRE AND CONDUIT	BREAKER AMPS	BREAKER POLES	LIGHT	RECP	MOTOR	HVAC	KITCH	WELD	OTHER	CKT	A	B	C	CKT	OTHER	WELD	KITCH	HVAC	MOTOR	RECP	LIGHT	BREAKER POLES	BREAKER AMPS	BRANCH CIRCUIT SETS	BRANCH CIRCUIT WIRE AND CONDUIT	DESCRIPTION
PANEL "A"	1	4# 2/0 1# 6G, 2"C	150	3	559	5403	0	436	0	0	1067	1	*			2	0	0	0	339	72	4500	463	3	150	1	4# 2/0 1# 6G, 2"C	PANEL "C"
					559	5403	0	436	0	0	1067	3		*		4	0	0	0	339	72	4500	463					
					559	5403	0	436	0	0	1067	5			*	6	0	0	0	339	72	4500	463					
PANEL "B"	1	4# 2/0 1# 6G, 2"C	150	3	465	4443	90	339	0	0	0	7	*			8	0	0	0	352	54	5460	536	3	150	1	4# 2/0 1# 6G, 2"C	PANEL "D"
					465	4443	90	339	0	0	0	9		*		10	0	0	0	352	54	5460	536					
					465	4443	90	339	0	0	0	11			*	12	0	0	0	352	54	5460	536					
EXISTING CIRCUIT	1		20	1							1000	13	*			14	0	0	0	0	0	11728	0	1	100	1	3# 1, 1# 6G, 1-1/2"C	EXISTING PANEL F
EXISTING FA	1		20	1		200						15		*		16	0	0	0	0	0	11728	0					
EXISTING FA	1		20	1		200						17			*	18							2300	1	30	1		LIGHT POLES
EXISTING FHM	1		20	1							200	19	*			20							2300					
ODU1-1	1	3# 1, 1# 8G, 1-1/2"C	100	3				7325				21		*		22				7325				3	100	1	3# 1, 1# 8G, 1-1/2"C	ODU2-1
								7325				23			*	24				7325								
								7325				25	*			26				7325								
EXISTING LIGHTING PANEL	1	3# 1, 1# 6G, 1-1/2"C	100	2							5000	27		*		28						1200		1	20	1	2# 12, 1# 12G, 1/2"C	DWH-1 & DWH-2
											5000	29			*	30					175			1	15	1	2# 12, 1# 12G, 1/2"C	RP-1
EXTERIOR LIGHTS	1	2# 12, 1# 12G, 1/2"C	20	1	160							31	*			32						180		1	20	1	2# 12, 1# 12G, 1/2"C	GFCI RECEPTACLE
SPARE			20	1								33		*		34								1	20			SPARE
SPARE			20	1								35			*	36								1	20			SPARE
SPARE			20	1								37	*			38								1	20			SPARE
SPARE			20	1								39		*		40								1	20			SPARE
SPARE			20	1								41			*	42								1	20			SPARE
SUBTOTAL (VA)					3233	29940	270	24300	0	0	14400						0	0	0	24048	553	54716	7596					SUBTOTAL (VA)

***PROVIDE LOCKOUT DEVICE

DESCRIPTION		LN	LL	P	W
MDP	VOLTS/PHASE/WIRE	120	208	3	4
	MOUNTING	SURFACE			
	CAPACITY	600	AMP		
	MAIN	600	MCB		
	ENCLOSURE	NEMA 1			
	AIC	35 KAIC			

LOAD	CONNECTED kVA	CONNECTED AMPS	DESIGN FACTOR	DESIGN kVA	DESIGN AMPS
LIGTHING	10.8	30.1	1.25	13.5	37.6
RECEPT	84.7	235.0	NEC	47.3	131.4
MOTOR	0.8	2.3	NEC	0.9	2.5
H.V.A.C.	48.3	134.2	1.00	48.3	134.2
KITCHEN	0.0	0.0	0.65	0.0	0.0
WELDER	0.0	0.0	1.00	0.0	0.0
OTHER	14.4	40.0	1.00	14.4	40.0
TOTAL	159.1	441.5		124.5	345.6

PHASE A	54797
PHASE B	57357
PHASE C	46904

NAME PLATE
MDP — 120 / 208V 3 Ø ,4W
SERVICE RATED PANEL FED FROM 600A FUSIBLE DISCONNECT SWITCH
DISTRIBUTION PANEL

2/26/2021 4:21 PM

PANEL A

DESCRIPTION	BRANCH CIRCUIT SETS	BRANCH CIRCUIT WIRE AND CONDUIT	BREAKER AMPS	BREAKER POLES	LIGHT	RECP	MOTOR	HVAC	KITCH	WELD	OTHER	CKT	A	B	C	CKT	OTHER	WELD	KITCH	HVAC	MOTOR	RECP	LIGHT	BREAKER POLES	BREAKER AMPS	BRANCH CIRCUIT SETS	BRANCH CIRCUIT WIRE AND CONDUIT	DESCRIPTION
COM 182 RECEPT.	1	2# 12, 1# 12G, 1/2"C	20	1		360						1	*			2						1080		1	20	1	2# 12, 1# 12G, 1/2"C	RECEPTACLES
RECEPTACLES	1	2# 12, 1# 12G, 1/2"C	20	1		1080						3		*		4						1080		1	20	1	2# 12, 1# 12G, 1/2"C	RECEPTACLES
RECEPTACLES	1	2# 12, 1# 12G, 1/2"C	20	1		1080						5			*	6						1080		1	20	1	2# 12, 1# 12G, 1/2"C	RECEPTACLES
RECEPTACLES	1	2# 12, 1# 12G, 1/2"C	20	1		1080						7	*			8						1080		1	20	1	2# 12, 1# 12G, 1/2"C	RECEPTACLES
RECEPTACLES	1	2# 12, 1# 12G, 1/2"C	20	1		1080						9		*		10						1080		1	20	1	2# 12, 1# 12G, 1/2"C	RECEPTACLES
RECEPTACLES	1	2# 12, 1# 12G, 1/2"C	20	1		1080						11			*	12						1080		1	20	1	2# 12, 1# 12G, 1/2"C	RECEPTACLES
RECEPTACLES	1	2# 12, 1# 12G, 1/2"C	20	1		1080						13	*			14						720		1	20	1	2# 12, 1# 12G, 1/2"C	RECEPTACLES
CP1-3,4,5,6	1	2# 12, 1# 12G, 1/2"C	20	1				216				15		*		16						370		1	20	1	2# 12, 1# 12G, 1/2"C	EWC RECEPTACLE
EXISTING CIRCUIT LIGHTING PANEL	1		30	1							1600	17			*	18						540		1	20	1	2# 12, 1# 12G, 1/2"C	CORRIDOR RECEPTS.
											1600	19	*			20							627	1	20	1	2# 12, 1# 12G, 1/2"C	OFFICE LIGHTS
IDU1-8,9,10, 11,12,13,14,15,16	1	2# 12, 1# 12G, 1/2"C	15	2				178				21		*		22							600	1	20	1	2# 12, 1# 12G, 1/2"C	OFFICE LIGHTS
								178				23			*	24							450	1	20	1	2# 12, 1# 12G, 1/2"C	CORRIDOR LIGHTS
IDU1-17,18,19, 20,21,22,23,24	1	2# 12, 1# 12G, 1/2"C	15	2				160				25	*			26						180		1	20	1	2# 12, 1# 12G, 1/2"C	EXTERIOR RECEPT.
								160				27		*		28						540		1	20	1	2# 12, 1# 12G, 1/2"C	RECEPTACLES
BCM1-1 & BCS1-1	1	2# 12, 1# 12G, 1/2"C	15	2				208				29			*	30						540		1	20	1	2# 12, 1# 12G, 1/2"C	RECEPTACLES
								208				31	*			32								1	20			SPARE
SPARE			20	1								33		*		34								1	20			SPARE
SPARE			20	1								35			*	36								1	20			SPARE
SPARE			20	1								37	*			38								1	20			SPARE
SPARE			20	1								39		*		40								1	20			SPARE
SPARE			20	1								41			*	42								1	20			SPARE
SUBTOTAL (VA)					0	6840	0	1308	0	0	3200						0	0	0	0	0	9370	1677					SUBTOTAL (VA)

***PROVIDE LOCKOUT DEVICE

DESCRIPTION		LN	LL	P	W
A	VOLTS/PHASE/WIRE	120	208	3	4
	MOUNTING	RECESSED			
	CAPACITY	225	AMP		
	MAIN	150	MCB		
	ENCLOSURE	NEMA 1			
	AIC	22 KAIC			

LOAD	CONNECTED kVA	CONNECTED AMPS	DESIGN FACTOR	DESIGN kVA	DESIGN AMPS
LIGTHING	1.7	4.7	1.25	2.1	5.8
RECEPT	16.2	45.0	NEC	13.1	36.4
MOTOR	0.0	0.0	NEC	0.0	0.0
H.V.A.C.	1.3	3.6	1.00	1.3	3.6
KITCHEN	0.0	0.0	1.00	0.0	0.0
WELDER	0.0	0.0	1.00	0.0	0.0
OTHER	3.2	8.9	1.00	3.2	8.9
TOTAL	22.4	62.2		19.7	54.7

PHASE A	8175
PHASE B	6384
PHASE C	7836

NAME PLATE
A — 120 / 208V 3 Ø ,4W
FED FROM MDP
LIGHTING, POWER, EQUIPMENT PANEL

2/26/2021 4:21 PM

LIGHT FIXTURE SCHEDULE

1. FIELD VERIFY CEILING SYSTEM AND PROVIDE ALL ACCESSORIESAND KITS FOR A SEAMLESS INSTALLATION
2. STANDARD LENGTHS FIXTURES SHALL BE USED TO MATCH EXISTING TO BE REPLACED. PROVIDE SHOP DRAWINGS PRIOR TO ORDERING FOR COORDINATION AND APPROVAL BY ARCHITECT/OWNER.
3. ALL FIXTURES SHALL BE PROVIDED WITH DISCONNECTING MEANS PER NEC-410.
4. PROVIDE DRY WALL MOUNTING FLANGE (DF) WHEN INSTALLED IN GYP CEILING
5. PROVIDE ALL BRACKETS, ACCESSORIES, HUBS, AND HARDWARE REQUIRED FOR A COMPLETE AND FUNCTIONAL SYSTEM.
6. VERIFY COLOR FOR ALL FIXTURES WITH ARCHITECT/OWNER BEFORE ORDERING.
7. FIELD ADJUST LUMEN OUTPUT TO OPTAIN AN AVERAGE OF 20 FOOT CANDLE LEVEL IN CORRIDOR.

TYPE	DESCRIPTION	MANUFACTURER & CATALOG NUMBER	MOUNTING	LAMPS VOLTS	LAMPS NO.	LAMPS TYPE	REMARKS
A	4' LED WRAPAROUND	LITHONIA:STL4-60L-MVOLT-GZ10-LP840	SURFACE	MVOLT	-	60W LED	10"X4' LED VOLUMETRIC WRAPAROUND WITH 6000 LUMEN OUTPUT.
B	2X4 LED PANEL WITH MULTI-LUMEN OPTION	LITHONIA:CPANL-2X4-40/50/60LM-40K-M2	RECESSED	MVOLT	-	60W LED	2'X4' LED PANEL WITH MULTI LUMEN OUTPUT. LUMEN OUTPUT SET TO 50LM.
C	2X2 LED PANEL WITH MULTI-LUMEN OPTION	LITHONIA:CPANL-2X2-24/33/44LM-40K-M4	RECESSED	MVOLT	-	40W LED	2'X1' LED PANEL WITH MULTI LUMEN OUTPUT. LUMENT OUTPUT SET TO 33LM.
E	LED EMERGENCY LIGHT	NAVILITE:N1LWH	SURFACE	MVOLT	-	2W LED	THERMOPLASTIC LED EMERGENCY LIGHT WITH 90 MINUTE BATTERY PACK
F	4" RECESSED LED CAN LIGHT	LITHONIA:EVO4SH-40/10-DFF-SOL-MVOLT	RECESSED	MVOLT	-	9W LED	4" RECESSED CAN LIGHT WITH
G	2X4 LED PANEL WITH MULTI-LUMEN OPTION	LITHONIA:CPANL-2X4-40/50/60LM-40K-M2	RECESSED	MVOLT	-	60W LED	2'X4' LED PANEL WITH MULTI LUMEN OUTPUT. LUMEN OLUTPUT SET TO 60LM.
W	WALL MOUNT LED SCONCE	LITHONIA:WSTLED-P1-40K-VW-MVOLT	SURFACE	MVOLT	-	11W LED	WALL MOUNT LED SCONCE WITH 1500 LUMEN OUTPUT
WE	WALL MOUNT LED SCONCE	LITHONIA:WSTLED-P1-40K-VW-MVOLT-E7WC	SURFACE	MVOLT	-	11W LED	SAME AS TYPE "W" EXCEPT WITH EMERGENCY BATTERY PACK
X	EXIT SIGN	LITHONIA:LQM-S-W-3R-120/277-EL-N-M6	WALL/CEILING	MVOLT	-	1W LED	LED EMERGENCY EXIT SIGN

PANEL B

DESCRIPTION	BRANCH CIRCUIT SETS	BRANCH CIRCUIT WIRE AND CONDUIT	BREAKER AMPS	BREAKER POLES	LIGHT	RECP	MOTOR	HVAC	KITCH	WELD	OTHER	CKT	A	B	C	CKT	OTHER	WELD	KITCH	HVAC	MOTOR	RECP	LIGHT	BREAKER POLES	BREAKER AMPS	BRANCH CIRCUIT SETS	BRANCH CIRCUIT WIRE AND CONDUIT	DESCRIPTION
RECEPTACLES	1	2# 12, 1# 12G, 1/2"C	20	1		1080						1	*			2						1080		1	20	1	2# 12, 1# 12G, 1/2"C	RECEPTACLES
RECEPTACLES	1	2# 12, 1# 12G, 1/2"C	20	1		1080						3		*		4						1080		1	20	1	2# 12, 1# 12G, 1/2"C	RECEPTACLES
RECEPTACLES	1	2# 12, 1# 12G, 1/2"C	20	1		1080						5			*	6						1080		1	20	1	2# 12, 1# 12G, 1/2"C	RECEPTACLES
RECEPTACLES	1	2# 12, 1# 12G, 1/2"C	20	1		1080						7	*			8						1080		1	20	1	2# 12, 1# 12G, 1/2"C	RECEPTACLES
RECEPTACLES	1	2# 12, 1# 12G, 1/2"C	20	1		1080						9		*		10						1080		1	20	1	2# 12, 1# 12G, 1/2"C	RECEPTACLES
IDU1-1,2,3,4,5,6,7	1	2# 12, 1# 12G, 1/2"C	15	2				140				11			*	12						1080		1	20	1	2# 12, 1# 12G, 1/2"C	RECEPTACLES
								140				13	*			14					270			1	20	1	2# 12, 1# 12G, 1/2"C	CP1-1,2,7,8,9
IDU1-25,26,27, 28,29,30,31,32	1	2# 12, 1# 12G, 1/2"C	15	2				160				15		*		16						370		1	20	1	2# 12, 1# 12G, 1/2"C	EWC RECEPTACLE
								160				17			*	18						720		1	20	1	2# 12, 1# 12G, 1/2"C	CORRIDOR RECEPT
BCS1-2,3	1	2# 12, 1# 12G, 1/2"C	15	2				208				19	*			20						360		1	20	1	2# 12, 1# 12G, 1/2"C	EXTERIOR RECEPT
								208				21		*		22							360	1	20	1	2# 12, 1# 12G, 1/2"C	OFFICE LIGHTS
SPARE			20	1								23			*	24							576	1	20	1	2# 12, 1# 12G, 1/2"C	OFFICE LIGHTS
SPARE			20	1								25	*			26							460	1	20	1	2# 12, 1# 12G, 1/2"C	CORRIDOR LIGHTS
SPARE			20	1								27		*		28								1	20			SPARE
SPARE			20	1								29			*	30								1	20			SPARE
SPARE			20	1								31	*			32								1	20			SPARE
SPARE			20	1								33		*		34								1	20			SPARE
SPARE			20	1								35			*	36								1	20			SPARE
SPACE												37	*			38												SPACE
SPACE												39		*		40												SPACE
SPACE												41			*	42												SPACE
SUBTOTAL (VA)					0	5400	0	1016	0	0	0						0	0	0	0	270	7930	1396					SUBTOTAL (VA)

***PROVIDE LOCKOUT DEVICE

DESCRIPTION		LN	LL	P	W
B	VOLTS/PHASE/WIRE	120	208	3	4
	MOUNTING	RECESSED			
	CAPACITY	225	AMP		
	MAIN	150	MCB		
	ENCLOSURE	NEMA 1			
	AIC	10 KAIC			

LOAD	CONNECTED kVA	CONNECTED AMPS	DESIGN FACTOR	DESIGN kVA	DESIGN AMPS
LIGTHING	1.4	3.9	1.25	1.7	4.8
RECEPT	13.3	37.0	NEC	11.7	32.4
MOTOR	0.3	0.7	NEC	0.3	0.9
H.V.A.C.	1.0	2.8	1.00	1.0	2.8
KITCHEN	0.0	0.0	1.00	0.0	0.0
WELDER	0.0	0.0	1.00	0.0	0.0
OTHER	0.0	0.0	1.00	0.0	0.0
TOTAL	16.0	44.4		14.8	41.0

PHASE A	5758
PHASE B	5418
PHASE C	4836

NAME PLATE
B — 120 / 208V 3 Ø ,4W
FED FROM MDP
LIGHTING, POWER, EQUIPMENT PANEL

2/26/2021 4:21 PM

PANEL C

DESCRIPTION	BRANCH CIRCUIT SETS	BRANCH CIRCUIT WIRE AND CONDUIT	BREAKER AMPS	BREAKER POLES	LIGHT	RECP	MOTOR	HVAC	KITCH	WELD	OTHER	CKT	A	B	C	CKT	OTHER	WELD	KITCH	HVAC	MOTOR	RECP	LIGHT	BREAKER POLES	BREAKER AMPS	BRANCH CIRCUIT SETS	BRANCH CIRCUIT WIRE AND CONDUIT	DESCRIPTION
RECEPTACLES	1	2# 12, 1# 12G, 1/2"C	20	1		1080						1	*			2						1080		1	20	1	2# 12, 1# 12G, 1/2"C	RECEPTACLES
RECEPTACLES	1	2# 12, 1# 12G, 1/2"C	20	1		1080						3		*		4						1080		1	20	1	2# 12, 1# 12G, 1/2"C	RECEPTACLES
RECEPTACLES	1	2# 12, 1# 12G, 1/2"C	20	1		1080						5			*	6						1080		1	20	1	2# 12, 1# 12G, 1/2"C	RECEPTACLES
RECEPTACLES	1	2# 12, 1# 12G, 1/2"C	20	1		1080						7	*			8						1080		1	20	1	2# 12, 1# 12G, 1/2"C	RECEPTACLES
RECEPTACLES	1	2# 12, 1# 12G, 1/2"C	20	1		1080						9		*		10						1080		1	20	1	2# 12, 1# 12G, 1/2"C	RECEPTACLES
RECEPTACLES	1	2# 12, 1# 12G, 1/2"C	20	1		1080						11			*	12						1080		1	20	1	2# 12, 1# 12G, 1/2"C	RECEPTACLES
IDU2-1,2,3,4,5,6,7	1	2# 12, 1# 12G, 1/2"C	15	2				140				13	*			14					216			1	20	1	2# 12, 1# 12G, 1/2"C	CP2-1,2,6,7
								140				15		*		16							360	1	20	1	2# 12, 1# 12G, 1/2"C	OFFICE LIGHTS
IDU2-24,25,26,27, 28,29,30	1	2# 12, 1# 12G, 1/2"C	15	2				160				17			*	18							509	1	20	1	2# 12, 1# 12G, 1/2"C	OFFICE LIGHTS
								160				19	*			20							520	1	20	1	2# 12, 1# 12G, 1/2"C	CORRIDOR LIGHTS
BCS2-2,3	1	2# 12, 1# 12G, 1/2"C	15	2				208				21		*		22						540		1	20	1	2# 12, 1# 12G, 1/2"C	CORRIDOR RECEPTS.
								208				23			*	24								1	20			SPARE
SPARE			20	1								25	*			26								1	20			SPARE
SPARE			20	1								27		*		28								1	20			SPARE
SPARE			20	1								29			*	30								1	20			SPARE
SPARE			20	1								31	*			32								1	20			SPARE
SPARE			20	1								33		*		34								1	20			SPARE
SPARE			20	1								35			*	36								1	20			SPARE
SPACE												37	*			38												SPACE
SPACE												39		*		40												SPACE
SPACE												41			*	42												SPACE
SUBTOTAL (VA)					0	6480	0	1016	0	0	0						0	0	0	0	216	7020	1389					SUBTOTAL (VA)

***PROVIDE LOCKOUT DEVICE

DESCRIPTION		LN	LL	P	W
C	VOLTS/PHASE/WIRE	120	208	3	4
	MOUNTING	RECESSED			
	CAPACITY	225	AMP		
	MAIN	150	MCB		
	ENCLOSURE	NEMA 1			
	AIC	10 KAIC			

LOAD	CONNECTED kVA	CONNECTED AMPS	DESIGN FACTOR	DESIGN kVA	DESIGN AMPS
LIGTHING	1.4	3.9	1.25	1.7	4.8
RECEPT	13.5	37.5	NEC	11.8	32.6
MOTOR	0.2	0.6	NEC	0.3	0.7
H.V.A.C.	1.0	2.8	1.00	1.0	2.8
KITCHEN	0.0	0.0	1.00	0.0	0.0
WELDER	0.0	0.0	1.00	0.0	0.0
OTHER	0.0	0.0	1.00	0.0	0.0
TOTAL	16.1	44.7		14.8	41.0

PHASE A	5356
PHASE B	5568
PHASE C	5197

NAME PLATE
C — 120 / 208V 3 Ø ,4W
FED FROM MDP
LIGHTING, POWER, EQUIPMENT PANEL

2/26/2021 4:21 PM

PANEL D

DESCRIPTION	BRANCH CIRCUIT SETS	BRANCH CIRCUIT WIRE AND CONDUIT	BREAKER AMPS	BREAKER POLES	LIGHT	RECP	MOTOR	HVAC	KITCH	WELD	OTHER	CKT	A	B	C	CKT	OTHER	WELD	KITCH	HVAC	MOTOR	RECP	LIGHT	BREAKER POLES	BREAKER AMPS	BRANCH CIRCUIT SETS	BRANCH CIRCUIT WIRE AND CONDUIT	DESCRIPTION
RECEPTACLES	1	2# 12, 1# 12G, 1/2"C	20	1		900						1	*			2						1080		1	20	1	2# 12, 1# 12G, 1/2"C	RECEPTACLES
RECEPTACLES	1	2# 12, 1# 12G, 1/2"C	20	1		1080						3		*		4						1080		1	20	1	2# 12, 1# 12G, 1/2"C	RECEPTACLES
RECEPTACLES	1	2# 12, 1# 12G, 1/2"C	20	1		1080						5			*	6						1080		1	20	1	2# 12, 1# 12G, 1/2"C	RECEPTACLES
RECEPTACLES	1	2# 12, 1# 12G, 1/2"C	20	1		1080						7	*			8						1080		1	20	1	2# 12, 1# 12G, 1/2"C	RECEPTACLES
RECEPTACLES	1	2# 12, 1# 12G, 1/2"C	20	1		1080						9		*		10						1080		1	20	1	2# 12, 1# 12G, 1/2"C	RECEPTACLES
RECEPTACLES	1	2# 12, 1# 12G, 1/2"C	20	1		1080						11			*	12						1080		1	20	1	2# 12, 1# 12G, 1/2"C	RECEPTACLES
RECEPTACLES	1	2# 12, 1# 12G, 1/2"C	20	1		1080						13	*			14						1080		1	20	1	2# 12, 1# 12G, 1/2"C	RECEPTACLES
IDU2-8,9,10, 11,12,13,14,15	1	2# 12, 1# 12G, 1/2"C	15	2				160				15		*		16						540		1	20	1	2# 12, 1# 12G, 1/2"C	RECEPTACLES
								160				17			*	18					162			1	20	1	2# 12, 1# 12G, 1/2"C	CP2-3,4,5
IDU2-16,17, 18,19,20,21,22,23	1	2# 12, 1# 12G, 1/2"C	15	2				160				19	*			20						360		1	20	1	2# 12, 1# 12G, 1/2"C	COM 235 RECEPT.
								160				21		*		22						540		1	20	1	2# 12, 1# 12G, 1/2"C	CORRIDOR RECEPT.
BCM2-1 & BCS2-1	1	2# 12, 1# 12G, 1/2"C	15	2				208				23			*	24							600	1	20	1	2# 12, 1# 12G, 1/2"C	OFFICE LIGHTS
								208				25	*			26							567	1	20	1	2# 12, 1# 12G, 1/2"C	OFFICE LIGHTS
SPARE			20	1								27		*		28							440	1	20	1	2# 12, 1# 12G, 1/2"C	CORRIDOR LIGHTS
SPARE			20	1								29			*	30								1	20			SPARE
SPARE			20	1								31	*			32								1	20			SPARE
SPARE			20	1								33		*		34								1	20			SPARE
SPARE			20	1								35			*	36								1	20			SPARE
SPACE												37	*			38												SPACE
SPACE												39		*		40												SPACE
SPACE												41			*	42												SPACE
SUBTOTAL (VA)					0	7380	0	1056	0	0	0						0	0	0	0	162	9000	1607					SUBTOTAL (VA)

***PROVIDE LOCKOUT DEVICE

DESCRIPTION		LN	LL	P	W
D	VOLTS/PHASE/WIRE	120	208	3	4
	MOUNTING	RECESSED			
	CAPACITY	225	AMP		
	MAIN	150	MCB		
	ENCLOSURE	NEMA 1			
	AIC	10 KAIC			

LOAD	CONNECTED kVA	CONNECTED AMPS	DESIGN FACTOR	DESIGN kVA	DESIGN AMPS
LIGTHING	1.6	4.5	1.25	2.0	5.6
RECEPT	16.4	45.5	NEC	13.2	36.6
MOTOR	0.2	0.4	NEC	0.2	0.6
H.V.A.C.	1.1	2.9	1.00	1.1	2.9
KITCHEN	0.0	0.0	1.00	0.0	0.0
WELDER	0.0	0.0	1.00	0.0	0.0
OTHER	0.0	0.0	1.00	0.0	0.0
TOTAL	19.2	53.3		16.5	45.7

PHASE A	7595
PHASE B	6160
PHASE C	5450

NAME PLATE
D — 120 / 208V 3 Ø ,4W
FED FROM MDP
LIGHTING, POWER, EQUIPMENT PANEL

2/26/2021 4:21 PM

REV.	DATE	BY	DESCRIPTION

DESIGNED ES
DRAWN CAD
CHECKED JG
DATE 01/15/20

"This preliminary drawing is released for the purpose of owner review under the authority of Javier Garcia, P.E., New Mexico Professional Engineer Number 14969 on January 26, 2021. This drawing is not to be used for construction, bidding, or permitting purposes. Alterations of this document is an offense under the New Mexico Engineering Practice Act."

Bath ENGINEERING
TEXAS FIRM REGISTRATION NO. 829
4110 RIO BRAVO SUITE 102
EL PASO, TX 79902
TEL: 915-313-7200

ELECTRICAL SCHEDULES

NEW MEXICO TECH WEST HALL

JOB NO. 3619
DRAWING NO. E6.0

ELECTRICAL DEMOLITION NOTES: (APPLICABLE TO ALL SHEETS)

1. THE CONTRACTOR SHALL REFER TO THE ARCHITECTURAL, STRUCTURAL, CIVIL, MECHANICAL AND PLUMBING DEMOLITION WORK DRAWINGS TO DETERMINE AND COORDINATE THE EXTENT OF THE DEMOLITION WORK REQUIRED FOR THE PROJECT.

2. THE CONTRACTOR SHALL VISIT THE SITE DURING THE BIDDING PERIOD TO COMPLETELY FAMILIARIZE SELF WITH THE SCOPE OF WORK, CONDITIONS, AND VERIFY FIELD MEASUREMENTS AND CIRCUITING ARRANGEMENTS FOR THIS PROJECT AND INCLUDE IN THE BID ALL NECESSARY COSTS ASSOCIATED WITH COMPLETION OF THE WORK.

3. DEMOLITION DRAWINGS ARE BASED ON CASUAL FIELD OBSERVATION AND EXISTING RECORD DOCUMENTS. REPORT DISCREPANCIES TO ARCHITECT/ENGINEER BEFORE DISTURBING EXISTING INSTALLATION. BEGINNING OF DEMOLITION MEANS INSTALLER ACCEPTS EXISTING CONDITIONS.

4. DEMOLITION WORK CONSISTS OF AND IS NOT LIMITED TO THE REMOVAL, RELOCATION, STORAGE, AND DISPOSAL OF EXISTING ELECTRICAL DISTRIBUTION EQUIPMENT, LIGHT FIXTURES, SWITCHES, POWER OUTLETS, FIRE–ALARM DEVICES, PUBLIC ADDRESS, TELEPHONE/ DATA SYSTEMS, AND ANY CONTROL POWER WIRING TO EXISTING MECHANICAL AND PLUMBING EQUIPMENT.

5. REMOVE ALL EXISTING BRANCH CIRCUITING AND EQUIPMENT (STARTERS, DISCONNECTS, DEVICES, WIRING, CABLES, AND CONDUIT), TO ALL LOADS THAT ARE BEING REMOVED BACK TO THE SOURCE OF SUPPLY UNLESS NOTED OTHERWISE.

6. DEMOLISH AND EXTEND EXISTING ELECTRICAL WORK AS INDICATED OR NOTED. REMOVE, RELOCATE, AND EXTEND EXISTING INSTALLATIONS TO ACCOMMODATE NEW CONSTRUCTION.

7. REMOVE EXPOSED ABANDONED CONDUIT AND WIRING TO SOURCE OF SUPPLY IN ITS ENTIRETY, INCLUDING ABANDONED CONDUIT ABOVE ACCESSIBLE CEILING FINISHES. CUT CONDUIT FLUSH WITH WALLS AND FLOORS, REMOVE ALL WIRING, AND PATCH SURFACES.

8. DISCONNECT ABANDONED OUTLETS AND REMOVE DEVICES. REMOVE ABANDONED OUTLETS IF CONDUIT SERVICING THEM IS ABANDONED AND REMOVED. PROVIDE BLANK COVER FOR ABANDONED OUTLETS WHICH ARE NOT REMOVED.

9. DISCONNECT AND REMOVE ABANDONED PANELBOARDS, DISTRIBUTION EQUIPMENT AND LUMINAIRES. REMOVE BRACKETS, STEMS, HANGERS, AND OTHER ACCESSORIES.

10. CONTRACTOR SHALL CIRCUIT TRACE ALL CIRCUITS AND EQUIPMENT THAT ARE BEING REMOVED OR RELOCATED. PRIOR TO DEMOLITION. CIRCUIT TRACE CIRCUITS SERVING OTHER FLOORS OR AREAS NOT BEING REMOVED AND INSURE THEY REMAIN FUNCTIONAL. MODIFY CONDUIT AND WIRING TO MAINTAIN CIRCUIT CONTINUITY TO REMAINING AREAS. RECIRCUIT THESE AREAS TO REMAINING PANELS AS REQUIRED.

11. COORDINATE UTILITY SERVICE OUTAGES WITH UTILITY COMPANY.

12. PROVIDE TEMPORARY WIRING AND CONNECTIONS TO MAINTAIN EXISTING SYSTEMS IN SERVICE DURING CONSTRUCTION. WHEN WORK MUST BE PERFORMED ON ENERGIZED EQUIPMENT OR CIRCUITS, USE PERSONNEL EXPERIENCED IN SUCH OPERATIONS.

13. EXISTING ELECTRICAL SERVICE: MAINTAIN EXISTING SYSTEM IN SERVICE UNTIL NEW SYSTEM IS COMPLETE AND READY FOR SERVICE. DISABLE SYSTEM ONLY TO MAKE SWITCHOVERS AND CONNECTIONS. PROVIDE PORTABLE TEMPORARY GENERATOR FOR OUTAGES EXTENDING LONGER THAN ONE (1) HOUR. OBTAIN PERMISSION FROM OWNER AT LEAST 24 HOURS BEFORE PARTIALLY OR COMPLETELY DISABLING SYSTEM. MINIMIZE OUTAGE DURATION. MAKE TEMPORARY CONNECTIONS TO MAINTAIN SERVICE IN AREAS ADJACENT TO WORK AREA.

14. EXISTING FIRE ALARM SYSTEM: MAINTAIN EXISTING SYSTEM IN SERVICE UNTIL NEW SYSTEM IS ACCEPTED. DISABLE SYSTEM ONLY TO MAKE SWITCHOVERS AND CONNECTIONS. PROVIDE FIRE WATCH AS REQUIRED PER LOCAL AUTHORITY HAVING JURISDICTION DURING DOWN TIME. NOTIFY OWNER AND LOCAL FIRE SERVICE AT LEAST 24 HOURS BEFORE PARTIALLY OR COMPLETELY DISABLING SYSTEM. MINIMIZE OUTAGE DURATION. MAKE TEMPORARY CONNECTIONS TO MAINTAIN SERVICE IN AREAS ADJACENT TO WORK AREA.

15. EXISTING TELEPHONE, PUBLIC ADDRESS, SECURITY, CLOCK SYSTEMS: MAINTAIN EXISTING SYSTEMS IN SERVICE UNTIL NEW SYSTEMS ARE COMPLETE AND READY FOR SERVICE. DISABLE SYSTEMS ONLY TO MAKE SWITCHOVERS AND CONNECTIONS. NOTIFY OWNER AND TELEPHONE UTILITY COMPANY AT LEAST 24 HOURS BEFORE PARTIALLY OR COMPLETELY DISABLING SYSTEM. MINIMIZE OUTAGE DURATION. MAKE TEMPORARY CONNECTIONS TO MAINTAIN SERVICE IN AREAS ADJACENT TO WORK AREA.

16. MAINTAIN ACCESS TO EXISTING ELECTRICAL INSTALLATIONS WHICH REMAIN ACTIVE. MODIFY INSTALLATION OR PROVIDE ACCESS AS APPROPRIATE.

17. EXTEND EXISTING INSTALLATIONS USING MATERIALS AND METHODS COMPATIBLE WITH EXISTING ELECTRICAL INSTALLATIONS, OR AS INDICATED OTHERWISE.

18. CLEAN AND REPAIR EXISTING MATERIALS AND EQUIPMENT WHICH IS TO REMAIN OR IS TO BE REUSED.

19. PANELBOARDS: CLEAN EXPOSED SURFACES AND CHECK TIGHTNESS OF ELECTRICAL CONNECTIONS. REPLACE DAMAGED CIRCUIT BREAKERS AND PROVIDE BLANK COVER PLATES FOR VACANT POSITIONS. PROVIDE TYPED CIRCUIT DIRECTORY SHOWING REVISED CIRCUITING ARRANGEMENT. ALL SPARE BREAKERS SHALL BE TURNED OFF AND LABELED AS SUCH.

20. LUMINAIRES: CLEAN EXISTING LUMINAIRES TO REMAIN OR BE REUSED. USE MILD DETERGENT TO CLEAN ALL EXTERIOR AND INTERIOR SURFACES; RINSE WITH CLEAN WATER AND WIPE DRY. REPLACE LAMPS, BALLASTS, AND BROKEN ELECTRICAL PARTS OR LENSES.

21. FOR WIRING AND RACEWAYS FOR REUSE, PROPERLY TERMINATE CONDUCTORS, TAG THE CONDUCTORS AND RACEWAYS WITH IDENTIFICATION TAGS INDICATING PANELBOARD/CIRCUIT NUMBER OR CONDUIT TERMINATION POINT. PROVIDE COVERS FOR ALL J–BOXES.

22. ALL ELECTRICAL DEMOLITION WORK SHALL BE DONE IN A NEAT AND WORKMANLIKE MANNER. ANY DAMAGE DONE TO ANY ADJACENT CONSTRUCTION OR FINISHES SHALL BE REPAIRED TO THE ARCHITECT/OWNER'S SATISFACTION AT NO COST TO THE OWNER.

23. THE CONTRACTOR SHALL PROVIDE CONTAINMENT AND DISPOSE OF DUST AND DEBRIS DURING DEMOLITION AND CONSTRUCTION.

24. THE CONTRACTOR SHALL PHASE DEMOLITION AND CONSTRUCTION WORK SUCH THAT NORMAL DAY–TO–DAY OPERATIONS CAN BE ACCOMPLISHED WITHOUT DELAY. THE CONTRACTOR SHALL COORDINATE PHASING AND SCHEDULING OF WORK WITH OWNER AND SHALL PROVIDE NIGHT CREWS AS REQUIRED BY OWNER'S PHASING PLAN.

25. THE CONTRACTOR SHALL PROVIDE TEMPORARY POWER AND LIGHTING DURING DEMOLITION AND CONSTRUCTION PER INDUSTRY SAFETY STANDARDS.

26. ALL MATERIALS DISCONNECTED AND REMOVED SHALL REMAIN THE PROPERTY OF THE OWNER, AND SHALL BE NEATLY PACKAGED BY THE CONTRACTOR FOR REUSE BY THE OWNER. THE OWNER SHALL DETERMINE WHAT DEMOLITION MATERIAL ARE TO BE SALVAGED. STOCKPILE SALVAGED MATERIALS IN AREAS DESIGNATED BY THE OWNER.

27. CONTRACTOR SHALL COORDINATE ROUTING OF NEW ELECTRICAL FEEDERS OR BRANCH CIRCUITS WITH EXISTING BRANCH CIRCUITS, MECHANICAL DUCTWORK, FIRE PROTECTION, PLUMBING, GAS, AIR AND OTHER SPECIAL SYSTEMS. CONTRACTOR SHALL VISIT SITE AND EXAMINE THE PROPOSED ROUTING PATH OF NEW FEEDER. CONTRACTORS SHALL IDENTIFY EXISTING SITE UTILITIES, LIGHT FIXTURES, DEVICES, ELECTRICAL FEEDERS, BRANCH CIRCUITS, TEL/DATA, FIRE ALARM AND SECURITY CIRCUITS REQUIRING RELOCATION. CONTRACTOR SHALL RELOCATE IDENTIFIED SERVICES IN A NEAT AND WORKMAN LIKE MANNER AS REQUIRED TO ACCOMMODATE NEW WORK AT NO ADDITIONAL COST TO OWNER. MODIFY/EXTEND CONDUIT AND WIRING AS REQUIRED. CONTRACTOR SHALL PREPARE DRAWING INDICATING PROPOSED ROUTING OF BRANCH CIRCUITS AND FEEDER WITH PULLBOX LOCATIONS AND SIZES AND EXISTING SERVICES BEING RELOCATED. CONTRACTOR SHALL CORE, CUT, PATCH, SEAL AND PAINT ALL WALLS, FLOORS, CEILINGS REQUIRED TO INSTALL NEW FEEDER.

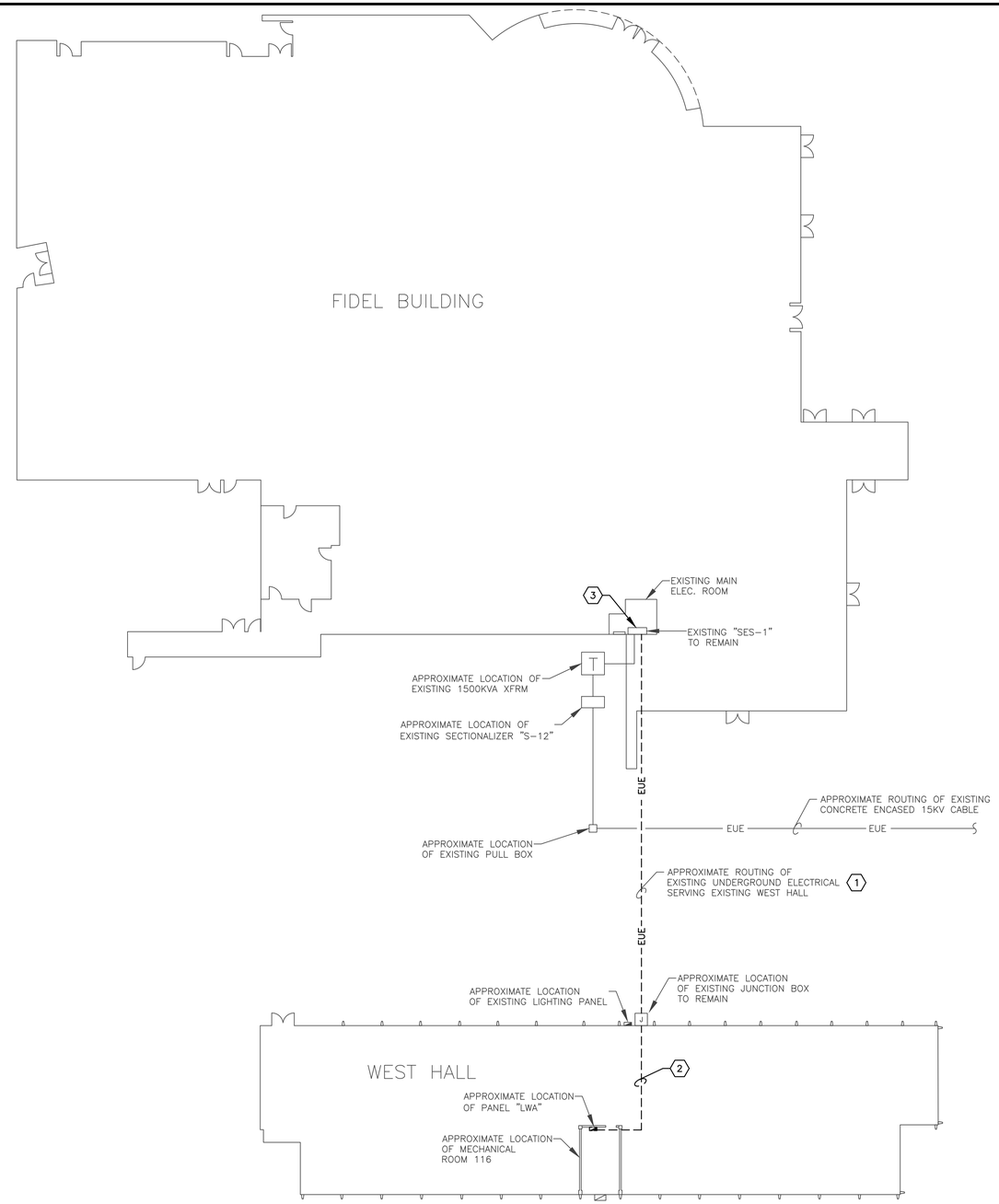

GENERAL NOTES

1. REFER TO ELECTRICAL LEGEND AND ELECTRICAL GENERAL NOTES FOR ADDITIONAL INFORMATION.
2. CONTRACTOR SHALL CONFIRM EXACT LOCATION OF ALL UNDERGROUND UTILITIES PRIOR TO DEMOLITION.

KEYED NOTES

1. CONTRACTOR SHALL REMOVE ALL WIRING FROM "SES–1" IN MAIN ELEC. ROOM OF FIDEL BUILDING TO EXISTING PANEL "LWA" IN WEST HALL. ALL UNDERGROUND CONDUITS SHALL BE CAPPED AND ABANDONED IN PLACE.
2. REMOVE CONDUIT AND WIRING IN THEIR ENTIRETY WITHIN WEST HALL BUILDING. CONTRACTOR SHALL COORDINATE REMOVAL AND REPLACEMENT OF DAMAGED FURR–OUT. REPLACE AND PAINT FURR–OUT TO MATCH ADJACENT WALLS.
3. CONTRACTOR SHALL LABEL 150A, 3 POLE CIRCUIT BREAKER IN EXISTING "SES–1" CURRENTLY SERVING WEST HALL PANEL "LWA" AS SPARE.

N

1 ED1.0 ELECTRICAL SITE PLAN - DEMOLITION

0 10' 20' 40' 60' 80'

SCALE: 1"=20'–0"

REV.	DATE	BY	DESCRIPTION

DESIGNED ES
DRAWN CAD
CHECKED JG
DATE 01/15/20

"This preliminary drawing is released for the purpose of owner review under the authority of Javier Garcia, P.E., New Mexico Professional Engineer Number 14969 on January 26, 2021. This drawing is not to be used for construction, bidding, or permitting purposes. Alterations of this document is an offense under the New Mexico Engineering Practice Act."

Bath ENGINEERING
TEXAS FIRM REGISTRATION NO. 829
4110 RIO BRAVO SUITE 102
EL PASO, TX 79902
TEL: 915-313-7200

ELECTRICAL SITE PLAN - DEMOLITION

NEW MEXICO TECH WEST HALL

JOB NO. 3619
DRAWING NO. ED1.0